BMS Flash MCU

HT45F8640

Revision: V1.50 Date: February 06, 2025

www.holtek.com

Table of Contents

Features 7
CPU Features 7
Peripheral Features 7
General Description 8
Block Diagram 9
Pin Assignment 10
Pin Description 10
Interconnection Signal Description 12
Absolute Maximum Ratings 13
Recommended Operating Ratings 13
D.C. Characteristics 13
Operating Voltage Characteristics 13
Operating Current Characteristics 14
Standby Current Characteristics 14
A.C. Characteristics 15
High Speed Internal Oscillator – HIRC 15
Low Speed Internal Oscillator Characteristics – LIRC 15
Operating Frequency Characteristic Curves 16
System Start Up Time Characteristics 16
Input/Output Characteristics 17
Memory Characteristics 17
A/D Converter Electrical Characteristics 18
LVD/LVR Electrical Characteristics 19
Reference Voltage Electrical Characteristics 20
Accumulative Cell Voltage Monitor Electrical Characteristics 20
Accumulative Cell Voltage Monitor I^2C Interface Characteristics 22
I^2C Electrical Characteristics 23
Power-on Reset Characteristics 24
System Architecture 25
Clocking and Pipelining 25
Program Counter 26
Stack 26
Arithmetic and Logic Unit – ALU 27
Flash Program Memory 28
Structure 28
Special Vectors 28
Look-up Table 28
Table Program Example 29

In Circuit Programming – ICP 30
On-Chip Debug Support – OCDS 31
In Application Programming – IAP 31

Data Memory 47
Structure 47
Data Memory Addressing 48
General Purpose Data Memory 48
Special Purpose Data Memory 48

Special Function Register Description 50
Indirect Addressing Registers – IAR0, IAR1, IAR2 50
Memory Pointers – MP0, MP1L/MP1H, MP2L/MP2H 50
Accumulator – ACC 51
Program Counter Low Register – PCL 52
Look-up Table Registers – TBLP, TBHP, TBLH 52
Status Register – STATUS 52

EEPROM Data Memory 54
EEPROM Data Memory Structure 54
EEPROM Registers 54
Read Operation from the EEPROM 56
Page Erase Operation to the EEPROM 56
Write Operation to the EEPROM 57
Write Protection 58
EEPROM Interrupt 59
Programming Considerations 59

Oscillators 62
Oscillator Overview 62
System Clock Configurations 62
Internal High Speed Internal RC Oscillator – HIRC 63
Internal 32kHz Oscillator – LIRC 63

Operating Modes and System Clocks 63
System Clocks 63
System Operation Modes 64
Control Registers 65
Operating Mode Switching 67
Standby Current Considerations 70
Wake-up 71
Programming Considerations 71

Watchdog Timer 72
Watchdog Timer Clock Source 72
Watchdog Timer Control Register 72
Watchdog Timer Operation 73

Reset and Initialisation **74**
Reset Functions 74
Reset Initial Conditions 78

Input/Output Ports **82**
Pull-high Resistors 82
Port A Wake-up 83
I/O Port Control Registers 84
I/O Port Source Current Control 84
Pin-shared Functions 86
I/O Pin Structures 90
Programming Considerations 90

Timer Modules – TM **91**
Introduction 91
TM Operation 91
TM Clock Source 91
TM Interrupts 92
TM External Pins 92
Programming Considerations 93

Compact Type TM – CTM **94**
Compact Type TM Operation 94
Compact Type TM Register Description 94
Compact Type TM Operating Modes 99

Standard Type TM – STM **105**
Standard Type TM Operation 105
Standard Type TM Register Description 105
Standard Type TM Operation Modes 110

Periodic Type TM – PTM **118**
Periodic Type TM Operation 118
Periodic Type TM Register Description 118
Periodic Type TM Operation Modes 123

Analog to Digital Converter **130**
A/D Converter Overview 130
A/D Converter Register Description 131
A/D Converter Reference Voltage 134
A/D Converter Input Signals 135
A/D Converter Operation 135
A/D Conversion Rate and Timing Diagram 136
Summary of A/D Conversion Steps 137
Programming Considerations 138
A/D Converter Function 138
A/D Conversion Programming Examples 139

I²C Serial Interface 140
I²C interface Operation 140
I²C Registers 142
I²C Bus Communication 145
I²C Bus Start Signal 145
I²C Slave Address 146
I²C Bus Read/Write Signal 146
I²C Bus Slave Address Acknowledge Signal 146
I²C Bus Data and Acknowledge Signal 146
I²C Time-out Control 148
Low Voltage Detector – LVD 149
LVD Register 149
LVD Operation 150
Interrupts 150
Interrupt Registers 151
Interrupt Operation 156
External Interrupt 156
Multi-function Interrupts 157
A/D Converter Interrupt 157
Time Base Interrupts 157
TM Interrupts 159
I²C Bus Interrupt 159
LVD Interrupt 159
EEPROM Interrupt 160
Interrupt Wake-up Function 160
Programming Considerations 160
Accumulative Cell Voltage Monitor 161
I²C Serial Interface Functional Description 162
Accumulative Cell Voltage Monitor Functional Description 166
Charge Balance Functional Description 166
Discharge N-type MOSFET Gate Driver Functional Description 167
Charge N-type MOSFET Gate Driver Functional Description 168
Sleep Mode Functional Description 168
Wake up from Sleep Mode Functional Description 168
Charge NMOS Switch Configuration 170
VIN, VREG, VOUT Capacitors 170
VIN Filter Recommendation 170
VBATn Protection and Balance Resistor Selection 171
Increase Charge Balancing Current 172
Charger and Switch Status Detection 173
Cell Voltage Monitor Scan Frequency 175
Voltage Spike Suppression Method 176
System ESD/EFT Protection Circuit Description 177
Charge Balance Register Off Method 178

Charge Balance Register On Method 178
PCB Layout Considerations 179
Thermal Considerations 179

Configuration Options 180

Application Circuits 181
3S Battery Monitoring Typical Application Circuit 181
7S Battery Monitoring Typical Application Circuit 182

Instruction Set 183
Introduction 183
Instruction Timing 183
Moving and Transferring Data 183
Arithmetic Operations 183
Logical and Rotate Operation 184
Branches and Control Transfer 184
Bit Operations 184
Table Read Operations 184
Other Operations 184

Instruction Set Summary 185
Table Conventions 185
Extended Instruction Set 187

Instruction Definition 189
Extended Instruction Definition 198

Package Information 205
28-pin SSOP (150mil) Outline Dimensions 206

Features

CPU Features

- Operating Voltage
  - f_{SYS}=8MHz: 1.8V~5.5V
  - f_{SYS}=12MHz: 2.7V~5.5V
  - f_{SYS}=16MHz: 3.3V~5.5V
- Up to 0.25μs instruction cycle with 16MHz system clock at V_{DD}=5V
- Power down and wake-up functions to reduce power consumption
- Oscillator types
  - Internal High Speed 8/12/16MHz RC – HIRC
  - Internal Low Speed 32kHz RC – LIRC
- Multi-mode operation: FAST, SLOW, IDLE and SLEEP
- Fully integrated internal oscillators require no external components
- All instructions executed in 1~3 instruction cycles
- Table read instructions
- 115 powerful instructions
- 8-level subroutine nesting
- Bit manipulation instruction

Peripheral Features

- Flash Program Memory: 4K×16
- RAM Data Memory: 256×8
- True EEPROM Memory: 128×8
- Watchdog Timer function
- In Application Programming – IAP
- Up to 11 bidirectional I/O lines
- Two external interrupt lines shared with I/O pins
- Programmable I/O port source current for LED applications
- Multiple Timer Modules for time measure, compare match output, PWM output function or single pulse output function
- I^2C Serial Communication Interface
- Up to 5 external channel 12-bit resolution A/D converter with Programmable Internal Reference Voltage V_R
- Dual Time-Base functions for generation of fixed time interrupt signals
- Low Voltage Reset function
- Low Voltage Detect function
- 5V/50mA internal Voltage Regulator with ±1% accuracy
- Accumulative Cell Voltage Monitor: 7-to-1 Analog Multiplexer with divided ratio accuracy of 1/n ±0.5%
- Cell Charging Balance Switches
- Single Discharge N-type MOSFET Gate Driver

- Single Charge N-type MOSFET Gate Driver
- Sleep Mode with 0.1μA ultra-low standby current
- Direct High Voltage Wake-up function
- Package type: 28-pin SSOP

General Description

The device is a Flash Memory BMS 8-bit high performance RISC architecture microcontroller with an integrated accumulative cell voltage monitor module, designed for BMS applications.

For memory features, the Flash Memory offers users the convenience of multi-programming features. Other memory includes an area of RAM Data Memory as well as an area of true EEPROM memory for storage of non-volatile data such as serial numbers, calibration data etc.

Analog features include a multi-channel 12-bit A/D converter, a high accuracy voltage regulator and Li-ion rechargeable battery protection functions. Multiple and extremely flexible Timer Modules provide timing, pulse generation and PWM output functions. Communication with the outside world is catered for by including fully integrated I^2C function, this interface which provides designers with a means of easy communication with external peripheral hardware. Protective features such as an internal Watchdog Timer, Low Voltage Reset and Low Voltage Detector coupled with excellent noise immunity and ESD protection ensure that reliable operation is maintained in hostile electrical environments.

A full choice of internal low and high oscillator functions are provided including fully integrated system oscillators which require no external components for their implementation. The ability to operate and switch dynamically between a range of operating modes using different clock sources gives users the ability to optimise microcontroller operation and minimise power consumption.

An accumulative cell voltage monitor, a high accuracy voltage regulator, a discharge N-type MOSFET gate driver and a charge N-type MOSFET gate driver are provided for 3 to 7 cell Li-ion rechargeable battery applications. The accumulative cell voltage monitor is used to monitor an accumulative voltage from 1 to N and output the divide-by-N voltage to the analog multiplexer with a ±0.5% divided ratio accuracy which can then be connected to the integrated A/D converter channel for measurement. The internal gate drivers can directly drive external power N-type MOSFETs to control charge and discharge. The integrated battery balance circuitry provides a cell balance current without the need of external transistors.

The inclusion of flexible I/O programming features, Time-Base functions along with many other features ensure that the device will find excellent use in household appliance products such as handheld measurement instruments, electric power tools, handheld hair dryers, handheld vacuum cleaners in addition to many others.

Block Diagram

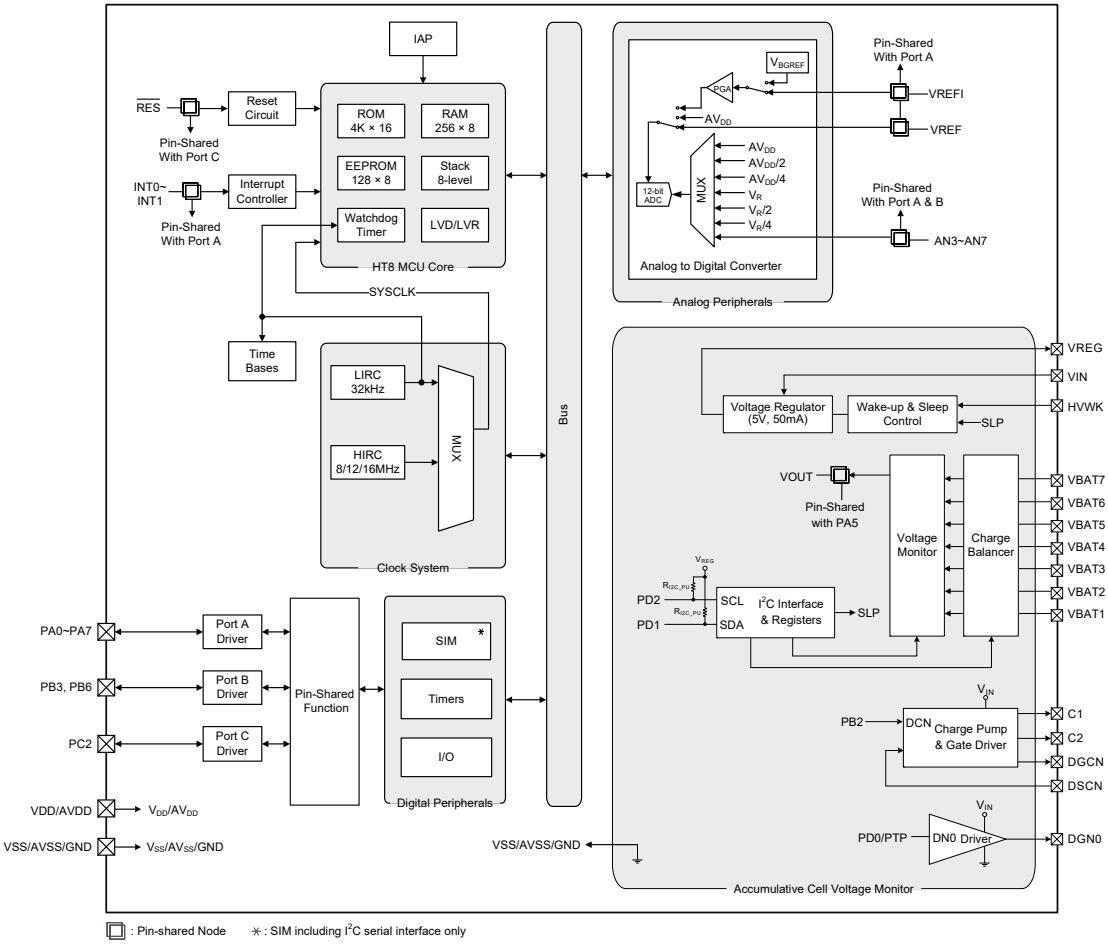

Pin Assignment

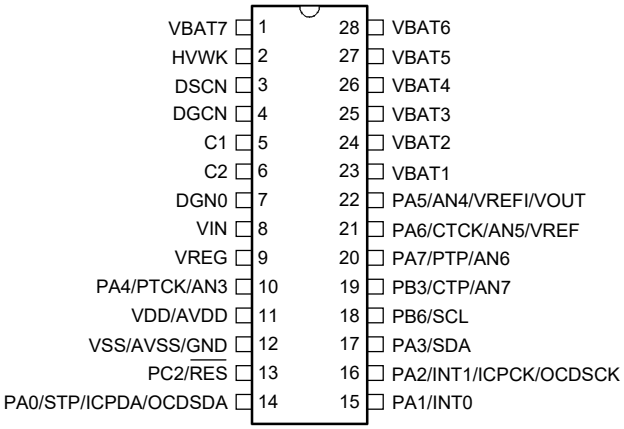

HT45F8640/HT45V8640
28 SSOP-A

Note: 1. If the pin-shared pin functions have multiple outputs, the desired pin-shared function is determined by the corresponding software control bits.
2. The OCDSDA and OCDSCK pins are used as the OCDS dedicated pins and only available for the HT45V8640 device which is the OCDS EV chip of the HT45F8640.
3. For the unbounded pins, PB0~PB1, PB4~PB5, PC0~PC1, PC3~PC6 and PD3 which should be properly configured to avoid unwanted current consumption resulting from floating input conditions. Refer to the “Standby Current Considerations” and “Input/Output Ports” sections.
4. The VREG pin should be connected to the VDD/AVDD.

Pin Description

The function of each pin is listed in the following table, however the details behind how each pin is configured is contained in other sections of the datasheet.

Pin Name	Function	OPT	I/T	O/T	Description
PA0/STP/ICPDA/OCDSDA	PA0	PAS0 PAWU PAPU	ST	CMOS	General purpose I/O. Register enabled pull-high and wake-up
	STP	PAS0	—	CMOS	STM output
	ICPDA	—	ST	CMOS	ICP Data/Address pin
	OCDSDA	—	ST	CMOS	OCDS Data/Address pin, for EV chip only
PA1/INT0	PA1	PAS0 PAWU PAPU	ST	CMOS	General purpose I/O. Register enabled pull-high and wake-up
	INT0	PAS0 INTEG INTC0 IFS	ST	—	External Interrupt 0
PA2/INT1/ICPCK/OCDSCK	PA2	PAS0 PAWU PAPU	ST	CMOS	General purpose I/O. Register enabled pull-high and wake-up
	INT1	PAS0 INTEG INTC2 IFS	ST	—	External Interrupt 1
	ICPCK	—	ST	—	ICP Clock pin
	OCDSCK	—	ST	—	OCDS Clock pin, for EV chip only

Pin Name	Function	OPT	I/T	O/T	Description
PA3/SDA	PA3	PAS0 PAWU PAPU	ST	CMOS	General purpose I/O. Register enabled pull-high and wake-up
	SDA	PAS0 IFS	ST	NMOS	I^2C data line
PA4/PTCK/AN3	PA4	PAS1 PAWU PAPU	ST	CMOS	General purpose I/O. Register enabled pull-high and wake-up
	PTCK	PAS1	ST	—	PTM clock input
	AN3	PAS1	AN	—	A/D Converter analog input channel 3
PA5/AN4/VREFI/VOUT	PA5	PAS1 PAWU PAPU	ST	CMOS	General purpose I/O. Register enabled pull-high and wake-up
	AN4	PAS1	AN	—	A/D Converter analog input channel 4
	VREFI	PAS1	AN	—	A/D Converter reference voltage input pin
	VOUT	PAS1	—	AN	7 to 1 analog multiplexer output. It is necessary to connect a 2.2nF capacitor to GND
PA6/CTCK/AN5/VREF	PA6	PAS1 PAWU PAPU	ST	CMOS	General purpose I/O. Register enabled pull-high and wake-up
	CTCK	PAS1	ST	—	CTM clock input
	AN5	PAS1	AN	—	A/D Converter analog input channel 5
	VREF	PAS1	AN	—	A/D Converter reference voltage input
PA7/PTP/AN6	PA7	PAS1 PAWU PAPU	ST	CMOS	General purpose I/O. Register enabled pull-high and wake-up
	PTP	PAS1	—	CMOS	PTM output
	AN6	PAS1	AN	—	A/D Converter analog input channel 6
PB3/CTP/AN7	PB3	PBS0 PBPU	ST	CMOS	General purpose I/O. Register enabled pull-high
	CTP	PBS0	—	CMOS	CTM output
	AN7	PBS0	AN	—	A/D Converter analog input channel 7
PB6/SCL	PB6	PBS1 PBPU	ST	CMOS	General purpose I/O. Register enabled pull-high
	SCL	PBS1 IFS	ST	NMOS	I^2C clock line
PC2/$\overline{RES}$	PC2	PCS0 PCPU	ST	CMOS	General purpose I/O. Register enabled pull-high
	$\overline{RES}$	PCS0	ST	—	External reset input
VDD/AVDD	VDD	—	PWR	—	Digital positive power supply
	AVDD	—	PWR	—	Analog positive power supply
VSS/AVSS/GND	VSS	—	PWR	—	Digital negative power supply, ground
	AVSS	—	PWR	—	Analog negative power supply, ground
	GND	—	PWR	—	Ground
VIN	VIN	—	PWR	—	Regulator input supply voltage. Connect to the top VBATn
VREG	VREG	—	—	PWR	Regulator 5V/50mA output. Connect a 4.7μF capacitor typically
VBAT1	VBAT1	—	AN	—	Battery cell 1 positive terminal and battery cell 2 negative terminal
VBAT2	VBAT2	—	AN	—	Battery cell 2 positive terminal and battery cell 3 negative terminal

Pin Name	Function	OPT	I/T	O/T	Description
VBAT3	VBAT3	—	AN	—	Battery cell 3 positive terminal and battery cell 4 negative terminal
VBAT4	VBAT4	—	AN	—	Battery cell 4 positive terminal and battery cell 5 negative terminal
VBAT5	VBAT5	—	AN	—	Battery cell 5 positive terminal and battery cell 6 negative terminal
VBAT6	VBAT6	—	AN	—	Battery cell 6 positive terminal and battery cell 7 negative terminal
VBAT7	VBAT7	—	AN	—	Battery cell 7 positive terminal and battery cell 8 negative terminal
DGN0	DGN0	—	—	AN	Gate driver output 0 for driving discharge N-type MOSFET. Recommended for applying on primary loading path
HVWK	HVWK	—	AN	—	High voltage wake-up function sense and trigger pin
DSCN	DSCN	—	AN	—	Charge pump reference voltage input. Connect to charge N-type MOSFET source pin
DGCN	DGCN	—	—	AN	Gate driver output for driving charge N-type MOSFET with 12V clamped from DGCN to DSCN
C1	C1	—	—	AN	Charge pump capacitor for DGCN. Connect an capacitor between C1 and C2
C2	C2	—	—	AN	Charge pump capacitor for DGCN. Connect an capacitor between C1 and C2

Legend: I/T: Input type;
OPT: Optional by register option;
PWR: Power;
ST: Schmitt Trigger input;
O/T: Output type;
AN: Analog signal;
CMOS: CMOS output;
NMOS: NMOS output.

Interconnection Signal Description

Several signals listed in the following table are not connected to external package pins. These signals are interconnection lines between the MCU and the Accumulative Cell Voltage Monitor. Users should properly configure the relevant I/O control to implement correct interconnection.

MCU Signal Name	Accumulative Cell Voltage Monitor Signal Name	Function	Description
PB2	DCN	PB2	General purpose I/O.
		DCN	Gate driver DGCN control input(1)
PD2	SCL	PD2	General purpose I/O.
		SCL	Accumulative Cell Voltage Monitor I²C serial clock line
PD1	SDA	PD1	General purpose I/O.
		SDA	Accumulative Cell Voltage Monitor I²C serial data line
PD0/PTP	DN0	PD0	General purpose I/O.
		PTP	PTM output
		DN0	Gate driver DGN0 control input(1)

Note: 1. Internal pull down with 430kΩ.
2. The internal lines, PD0~PD2, PB2 which are internally connected to the Accumulative Cell Voltage Monitor inputs, DN0, SDA, SCL and DCN, respectively, should be properly configured to implement correct interconnection and Li-battery protection function control. Refer to the “Input/Output Ports” and “Accumulative Cell Voltage Monitor” sections for more details.

Absolute Maximum Ratings

Supply Voltage (V_{DD}) ..... V_{SS}-0.3V to 6.0V

Input Voltage ..... V_{SS}-0.3V to V_{DD}+0.3V

Storage Temperature ..... -60°C to 150°C

Operating Temperature ..... -40°C to 85°C

I_{OL} Total 80mA

I_{OH} Total ..... -80mA

Total Power Dissipation 500mW

VIN, DSCN, HVWK, C2 ..... -0.3V to 48V

DGCN, C1 ..... -0.3V to 60V

DGN0 ..... -0.3V to 18V

V_{REG}, V_{OUT} ,V_{BAT1}. ..... -0.3V to 5.5V

$\Delta[V_{BATi}\sim V_{BAT(i-1)}]$, i=7~2 ..... -0.3V to 5.5V

VBATn ESD Susceptibility (Human Body Model) ..... ±2000V

VBATn ESD Susceptibility (Machine Model) ..... ±200V

Note: These are stress ratings only. Stresses exceeding the range specified under "Absolute Maximum Ratings" may cause substantial damage to this device. Functional operation of this device at other conditions beyond those listed in the specification is not implied and prolonged exposure to extreme conditions may affect device reliability.

Recommended Operating Ratings

V_{IN} ..... 7.5V to 36.0V

Ta ..... -40°C to 85°C

Note: Recommended Operating Ratings indicate conditions for which the device is intended to be functional, but do not guarantee specified performance limits.

D.C. Characteristics

For data in the following tables, note that factors such as oscillator type, operating voltage, operating frequency, pin load conditions, temperature and program instruction type, etc., can all exert an influence on the measured values.

Operating Voltage Characteristics

Ta=-40°C~85°C

Symbol	Parameter	Test Conditions	Min.	Typ.	Max.	Unit
V_{DD}	Operating Voltage – HIRC	f_{SYS}=8MHz	1.8	—	5.5	V
		f_{SYS}=12MHz	2.7	—	5.5	
		f_{SYS}=16MHz	3.3	—	5.5	
	Operating Voltage – LIRC	f_{SYS}=32kHz	1.8	—	5.5	V

Operating Current Characteristics

Ta=25°C

Symbol	Operation Mode	Test Conditions		Min.	Typ.	Max.	Unit
		V_{DD}	Conditions				
I_{DD}	SLOW Mode – LIRC	1.8V	f_{SYS}=32kHz	—	12	24	μA
		3V		—	15	30	
		5V		—	30	50	
	FAST Mode – HIRC	1.8V	f_{SYS}=8MHz	—	0.3	1.0	mA
		3V		—	0.6	1.2	
		5V		—	1.2	2.4	
		2.7V	f_{SYS}=12MHz	—	1.0	1.4	mA
		3V		—	1.2	1.8	
		5V		—	1.8	3.6	
		3.3V	f_{SYS}=16MHz	—	2.0	4.0	mA
		5V		—	2.2	4.5	

Note: When using the characteristic table data, the following notes should be taken into consideration:

1. Any digital inputs are setup in a non-floating condition.
2. All measurements are taken under conditions of no load and with all peripherals in an off state.
3. There are no DC current paths.
4. All Operating Current values are measured using a continuous NOP instruction program loop.

Standby Current Characteristics

Ta=25°C, unless otherwise specified.

Symbol	Operation Mode	Test Conditions		Min.	Typ.	Max.	Max. @85°C	Unit
		V_{DD}	Conditions					
I_{STB}	SLEEP Mode	1.8V	WDT off	—	0.5	0.8	4.5	μA
		3V		—	0.6	0.9	5.0	
		5V		—	0.7	2.0	7.0	
		1.8V	WDT on	—	1.5	3.0	5.5	μA
		3V		—	1.8	3.6	6.5	
		5V		—	3	5	10	
	IDLE0 Mode – LIRC	1.8V	f_{SUB} on	—	2.4	4.0	8.0	μA
		3V		—	3.0	5.0	9.0	
		5V		—	5	10	11	
	IDLE1 Mode – HIRC	1.8V	f_{SUB} on, f_{SYS}=8MHz	—	288	400	480	μA
		3V		—	360	500	600	
		5V		—	850	1000	1200	
		2.7V	f_{SUB} on, f_{SYS}=12MHz	—	550	700	800	μA
		3V		—	650	800	900	
		5V		—	1800	2000	2200	
		3.3V	f_{SUB} on, f_{SYS}=16MHz	—	1.8	3.6	4.4	mA
		5V		—	2.0	4.0	4.8	

Note: When using the characteristic table data, the following notes should be taken into consideration:

1. Any digital inputs are setup in a non-floating condition.
2. All measurements are taken under conditions of no load and with all peripherals in an off state.
3. There are no DC current paths.
4. All Standby Current values are taken after a HALT instruction execution thus stopping all instruction execution.

A.C. Characteristics

For data in the following tables, note that factors such as oscillator type, operating voltage, operating frequency and temperature etc., can all exert an influence on the measured values.

High Speed Internal Oscillator – HIRC

During the program writing operation the writer will trim the HIRC oscillator at a user selected HIRC frequency and user selected voltage of either 3V or 5V.

Symbol	Parameter	Test Conditions		Min.	Typ.	Max.	Unit
		V_{DD}	Temp.				
f_{HIRC}	8MHz Writer Trimmed HIRC Frequency	3V/5V	25°C	-1%	8	+1%	MHz
			-40°C~85°C	-2%	8	+2%	
		2.2V~5.5V	25°C	-2.5%	8	+2.5%	
			-40°C~85°C	-3%	8	+3%	
		1.8V~5.5V	25°C	-8%	8	+8%	
			-40°C~85°C	-13%	8	+13%	
	12MHz Writer Trimmed HIRC Frequency	3V/5V	25°C	-1%	12	+1%	MHz
			-40°C~85°C	-2%	12	+2%	
		2.7V~5.5V	25°C	-2.5%	12	+2.5%	
			-40°C~85°C	-3%	12	+3%	
	16MHz Writer Trimmed HIRC Frequency	5V	25°C	-1%	16	+1%	MHz
			-40°C~85°C	-2%	16	+2%	
		3.3V~5.5V	25°C	-2.5%	16	+2.5%	
			-40°C~85°C	-3%	16	+3%	

Note:1. The 3V/5V values for V_{DD} are provided as these are the two selectable fixed voltages at which the HIRC frequency is trimmed by the writer.

2. The row below the 3V/5V trim voltage row is provided to show the values for the full V_{DD} range operating voltage. It is recommended that the trim voltage is fixed at 3V for application voltage ranges from 1.8V to 3.6V and fixed at 5V for application voltage ranges from 3.3V to 5.5V.

3. The minimum and maximum tolerance values provided in the table are for the frequency at which the writer trims the HIRC oscillator. After trimming at this chosen specific frequency any change in HIRC oscillator frequency using the oscillator register control bits by the application program will give a frequency tolerance to within ±20%.

Low Speed Internal Oscillator Characteristics – LIRC

Symbol	Parameter	Test Conditions		Min.	Typ.	Max.	Unit
		V_{DD}	Temp.				
f_{LIRC}	LIRC Frequency	1.8V~5.5V	25°C	-10%	32	+10%	kHz
			-40°C~85°C	-50%	32	+50%	kHz
t_{START}	LIRC Start-up Time	—	-40°C~85°C	—	—	500	μs

Operating Frequency Characteristic Curves

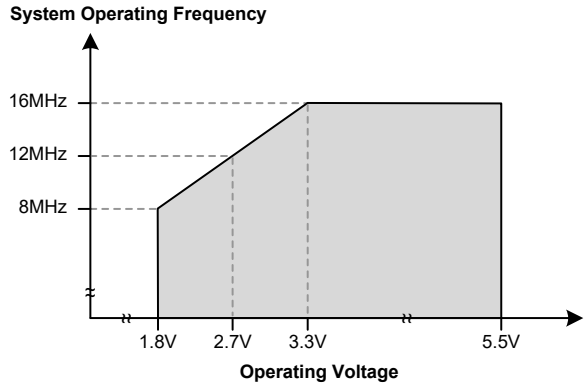

System Start Up Time Characteristics

Ta=-40°C~85°C

Symbol	Parameter	Test Conditions		Min.	Typ.	Max.	Unit
		V_{DD}	Conditions				
t_{SST}	System Start-up Time Wake-up from Condition where f_{SYS} is off	—	$f_{SYS}=f_H \sim f_H/64$, $f_H=f_{HIRC}$	—	16	—	t_{HIRC}
		—	$f_{SYS}=f_{SUB}=f_{LIRC}$	—	2	—	t_{LIRC}
	System Start-up Time Wake-up from Condition where f_{SYS} is on	—	$f_{SYS}=f_H \sim f_H/64$, $f_H=f_{HIRC}$	—	2	—	t_H
		—	$f_{SYS}=f_{SUB}=f_{LIRC}$	—	2	—	t_{SUB}
	System Speed Switch Time FAST to SLOW Mode or SLOW to FAST Mode	—	f_{HIRC} switches from off → on	—	16	—	t_{HIRC}
t_{RSTD}	System Reset Delay Time Reset Source from Power-on reset or LVR Hardware Reset	—	RR_{POR}=5V/ms	10	16	24	ms
	System Reset Delay Time LVRC/WDTC/RSTC Register Software Reset	—	—				
	System Reset Delay Time Reset Source from WDT Overflow or $\overline{RES}$ Pin Reset	—	—	10	16	24	
t_{SRESET}	Minimum Software Reset Width to Reset	—	—	45	90	180	μs
t_{RES}	External Reset Minimum Low Pulse Width	—	—	10	—	—	μs
t_{ACTV}	ROM Activation Time – Wake-up from Power Down Mode	—	—	32	—	64	μs

Note: 1. For the System Start-up time values, whether f_{SYS} is on or off depends upon the mode type and the chosen f_{SYS} system oscillator. Details are provided in the System Operating Modes section.

2. The time units, shown by the symbols t_{HIRC} etc. are the inverse of the corresponding frequency values as provided in the frequency tables. For example $t_{HIRC}=1/f_{HIRC}$, $t_{SYS}=1/f_{SYS}$ etc.

3. If the LIRC is used as the system clock and if it is off when in the SLEEP Mode, then an additional LIRC start up time, t_{START}, as provided in the LIRC frequency table, must be added to the t_{SST} time in thee table above.

4. The System Speed Switch Time is effectively the time taken for the newly activated oscillator to start up.

5. The ROM activation time t_{ACTV} should be added when calculating the total system start-up time of a wake-up from the power down mode.

Input/Output Characteristics

Ta=25°C

Symbol	Parameter	Test Conditions		Min.	Typ.	Max.	Unit
		V_{DD}	Conditions				
V_{IL}	Input Low Voltage for I/O Ports or Input Pins	5V	—	0	—	1.5	V
		—	—	0	—	$0.2V_{DD}$	V
	Input Low Voltage for $\overline{RES}$ pin	—	V_{DD}≥2.7	0	—	$0.4V_{DD}$	V
		—	1.8≤V_{DD}<2.7	0	—	$0.3V_{DD}$	V
V_{IH}	Input High Voltage for I/O Ports or Input Pins	5V	—	3.5	—	5.0	V
		—		$0.8V_{DD}$	—	V_{DD}	V
	Input High Voltage for $\overline{RES}$ pin	—	—	$0.9V_{DD}$	—	V_{DD}	V
I_{OL}	Sink Current for I/O Ports	3V	V_{OL}=$0.1V_{DD}$	16	32	—	mA
		5V		32	65	—	
I_{OH}	Source Current for I/O Ports	3V	V_{OH}=$0.9V_{DD}$, SLEDCn[m+1:m]=00B (n=0, 1; m=0, 2, 4, 6)	-0.7	-1.5	—	mA
		5V		-1.5	-2.9	—	
		3V	V_{OH}=$0.9V_{DD}$, SLEDCn[m+1:m]=01B (n=0, 1; m=0, 2, 4, 6)	-1.3	-2.5	—	
		5V		-2.5	-5.1	—	
		3V	V_{OH}=$0.9V_{DD}$, SLEDCn[m+1:m]=10B (n=0, 1; m=0, 2, 4, 6)	-1.8	-3.6	—	
		5V		-3.6	-7.3	—	
		3V	V_{OH}=$0.9V_{DD}$, SLEDCn[m+1:m]=11B (n=0, 1; m=0, 2, 4, 6)	-4	-8	—	
		5V		-8	-16	—	
R_{PH}	Pull-high Resistance for I/O Ports (Note)	3V	LVPU=0, PxPU=FFH (Px: PA, PB, PC, PD)	20	60	100	kΩ
		5V		10	30	50	
		3V	LVPU=1, PxPU=FFH (Px: PA, PB, PC, PD)	6.67	15.00	23.00	kΩ
		5V		3.5	7.5	12.0	
I_{LEAK}	Input Leakage Current	5V	V_{IN}=V_{DD} or V_{IN}=V_{SS}	—	—	±1	μA
t_{TCK}	TM Clock Input Pin Minimum Pulse Width	—	—	0.3	—	—	μs
t_{INT}	External Interrupt Minimum Pulse Width	—	—	10	—	—	μs

Note: The R_{PH} internal pull-high resistance value is calculated by connecting to ground and enabling the input pin with a pull-high resistor and then measuring the pin current at the specified supply voltage level. Dividing the voltage by this measured current provides the R_{PH} value.

Memory Characteristics

Ta=-40°C~85°C, unless otherwise specified.

Symbol	Parameter	Test Conditions		Min.	Typ.	Max.	Unit
		V_{DD}	Conditions				
V_{DD}	V_{DD} for Read / Erase / Write	—	—	V_{DDmin}	—	V_{DDmax}	V
Flash Program Memory / Data EEPROM Memory							
t_{FWR}	Flash Program Memory Write Time	—	—	—	2.2	2.7	ms
t_{FER}	Flash Program Memory Erase Time	—	—	—	3.2	3.9	ms
t_{EERD}	EEPROM Read Time	—	—	—	—	4	t_{SYS}
t_{EEWR}	EEPROM Write Time (Byte Mode)	—	—	—	5.4	7.0	ms
	EEPROM Write Time (Page Mode)	—	—	—	2.2	3.0	ms
t_{EEER}	EEPROM Erase Time	—	—	—	3.2	4.5	ms
E_P	Cell Endurance – Program Memory	—	—	10K	—	—	E/W
	Cell Endurance – Data EEPROM Memory	—	—	100K	—	—	E/W
t_{RETD}	ROM Data Retention Time	—	Ta=25°C	—	40	—	Year

Symbol	Parameter	Test Conditions		Min.	Typ.	Max.	Unit
		V_{DD}	Conditions				
RAM Data Memory							
V_{DR}	RAM Data Retention Voltage	—	—	1	—	—	V

Note: “E/W” means Eease/Write times.

A/D Converter Electrical Characteristics

Ta=-40°C~85°C

Symbol	Parameter	Test Conditions		Min.	Typ.	Max.	Unit
		V_{DD}	Conditions				
V_{ADI}	Input Voltage	—	—	0	—	V_{REF}	V
V_{REF}	Reference Voltage	—	—	1.8	—	V_{DD}	V
N_R	Resolution	—	—	—	—	12	Bit
DNL	Differential Non-linearity	1.8V	SAINS[3:0]=0000B, SAVRS[1:0]=00B, V_{REF}=V_{DD}, t_{ADCK}=2.0μs	-3	—	+3	LSB
			SAINS[3:0]=0000B, SAVRS[1:0]=00B, V_{REF}=V_{DD}, t_{ADCK}=10μs				
		2V	SAINS[3:0]=0000B, SAVRS[1:0]=00B, V_{REF}=V_{DD}, t_{ADCK}=0.5μs				
		3V	SAINS[3:0]=0000B, SAVRS[1:0]=00B, V_{REF}=V_{DD}, t_{ADCK}=0.5μs				
			SAINS[3:0]=0000B, SAVRS[1:0]=00B, V_{REF}=V_{DD}, t_{ADCK}=10μs				
		5V	SAINS[3:0]=0000B, SAVRS[1:0]=00B, V_{REF}=V_{DD}, t_{ADCK}=0.5μs				
			SAINS[3:0]=0000B, SAVRS[1:0]=00B, V_{REF}=V_{DD}, t_{ADCK}=10μs				
INL	Integral Non-linearity	1.8V	SAINS[3:0]=0000B, SAVRS[1:0]=00B, V_{REF}=V_{DD}, t_{ADCK}=2.0μs	-4	—	+4	LSB
			SAINS[3:0]=0000B, SAVRS[1:0]=00B, V_{REF}=V_{DD}, t_{ADCK}=10μs				
		2V	SAINS[3:0]=0000B, SAVRS[1:0]=00B, V_{REF}=V_{DD}, t_{ADCK}=0.5μs				
		3V	SAINS[3:0]=0000B, SAVRS[1:0]=00B, V_{REF}=V_{DD}, t_{ADCK}=0.5μs				
			SAINS[3:0]=0000B, SAVRS[1:0]=00B, V_{REF}=V_{DD}, t_{ADCK}=10μs				
		5V	SAINS[3:0]=0000B, SAVRS[1:0]=00B, V_{REF}=V_{DD}, t_{ADCK}=0.5μs				
			SAINS[3:0]=0000B, SAVRS[1:0]=00B, V_{REF}=V_{DD}, t_{ADCK}=10μs				

Symbol	Parameter	Test Conditions		Min.	Typ.	Max.	Unit
		V_{DD}	Conditions				
I_{ADC}	Additional Current for A/D Converter Enable	1.8V	No load (t_{ADCK}=2.0μs)	—	280	400	μA
		3V	No load (t_{ADCK}=0.5μs)	—	450	600	
		5V	No load (t_{ADCK}=0.5μs)	—	850	1000	
t_{ADCK}	Clock Period	—	1.8V≤V_{DD}<2.0V	2.0	—	10.0	μs
			2.0V≤V_{DD}≤5.5V	0.5	—	10.0	
t_{ADC}	Conversion Time (Includes A/D Sample and Hold Time)	—	—	—	16	—	t_{ADCK}
t_{ON2ST}	A/D Converter On-to-Start Time	—	—	4	—	—	μs
I_{PGA}	Additional Current for PGA Enable	2.2V	No load, PGAIS=1, PGAGS[1:0]=01	—	250	500	μA
		3V	No load, PGAIS=1, PGAGS[1:0]=01	—	300	600	μA
		5V	No load, PGAIS=1, PGAGS[1:0]=01	—	400	700	μA
V_{OR}	PGA Maximum Output Voltage Range	2.2V	—	V_{SS}+0.1	—	V_{DD}-0.1	V
		3V	—	V_{SS}+0.1	—	V_{DD}-0.1	V
		5V	—	V_{SS}+0.1	—	V_{DD}-0.1	V
V_{VR}	Fix Voltage Output of PGA	2.2V~5.5V	V_{RI}=V_{BGREF} (PGAIS=1)	-1%	2	+1%	V
		3.2V~5.5V	V_{RI}=V_{BGREF} (PGAIS=1)	-1%	3	+1%	V
		4.2V~5.5V	V_{RI}=V_{BGREF} (PGAIS=1)	-1%	4	+1%	V
V_{IR}	PGA Input Voltage Range	3V	Gain=1, PGAIS=0 Relative gain Gain error < ±5%	V_{SS}+0.1	—	V_{DD}-1.4	V
		5V		V_{SS}+0.1	—	V_{DD}-1.4	V

LVD/LVR Electrical Characteristics

Ta=-40°C~85°C

Symbol	Parameter	Test Conditions		Min.	Typ.	Max.	Unit
		V_{DD}	Conditions				
V_{LVR}	Low Voltage Reset Voltage	—	LVR enable, voltage select 1.7V	-5%	1.7	+5%	V
			LVR enable, voltage select 1.9V	-5%	1.9	+5%	
			LVR enable, voltage select 2.55V	-3%	2.55	+3%	
			LVR enable, voltage select 3.15V	-3%	3.15	+3%	
			LVR enable, voltage select 3.8V	-3%	3.8	+3%	
V_{LVD}	Low Voltage Detector Voltage	—	LVD enable, voltage select 1.8V	-5%	1.8	+5%	V
			LVD enable, voltage select 2.0V		2.0		
			LVD enable, voltage select 2.4V		2.4		
			LVD enable, voltage select 2.7V		2.7		
			LVD enable, voltage select 3.0V		3.0		
			LVD enable, voltage select 3.3V		3.3		
			LVD enable, voltage select 3.6V		3.6		
			LVD enable, voltage select 4.0V		4.0		
I_{LVRLVD}	Operating Current	3V	LVD enable, LVR enable, V_{LVR}=1.9V, V_{LVD}=2V	—	—	10	μA
		5V	LVD enable, LVR enable, V_{LVR}=1.9V, V_{LVD}=2V	—	10	15	

Symbol	Parameter	Test Conditions		Min.	Typ.	Max.	Unit
		V_{DD}	Conditions				
t_{LVDS}	LVDO Stable Time	—	For LVR enable, VBGREN=0, LVD off → on	—	—	18	μs
			For LVR disable, VBGREN=0, LVD off → on	—	—	150	
t_{LVD}	Minimum Low Voltage Width to Interrupt	—	—	60	120	240	μs
t_{LVR}	Minimum Low Voltage Width to Reset	—	—	120	240	480	μs
I_{LVR}	Additional Current for LVR Enable	5V	LVD disable	—	—	14	μA
I_{LVD}	Additional Current for LVD Enable	5V	LVR disable	—	—	14	μA

Reference Voltage Electrical Characteristics

Ta=-40°C~85°C, unless otherwise specified.

Symbol	Parameter	Test Conditions		Min.	Typ.	Max.	Unit
		V_{DD}	Conditions				
V_{DD}	Operating Voltage	—	—	1.8	—	5.5	V
V_{BGREF}	Bandgap Reference Voltage	1.8V~2.2V	—	-10%	1.2	+10%	V
		2.2V~5.5V	—	-1%	1.2	+1%	
I_{BGREF}	Additionnal Current Consumption for Bandgap Reference Voltage Enable	5.5V	—	—	25	35	μA
PSRR	Power Supply Rejection Ratio	—	Ta=25°C V_{RIPPLE}=1V_{P-P}, f_{RIPPLE}=100Hz	75	—	—	dB
En	Output Noise	—	Ta=25°C No load current, f=0.1Hz~10Hz	—	300	—	μV_{RMS}
I_{SD}	Shutdown Current	—	VBGREN=0	—	—	0.1	μA
t_{START}	Startup Time	1.8V~5.5V	Ta=25°C	—	—	400	μs

Note: The V_{BGREF} voltage is used as the A/D converter PGA input signal.

Accumulative Cell Voltage Monitor Electrical Characteristics

V_{IN}=36V, C_{VREG}=4.7μF, C_{VOUT}=2.2nF, Ta=25°C, unless otherwise specified

Symbol	Parameter	Test Condition	Min.	Typ.	Max.	Unit
Supply and Input						
V_{IN}	Supply Voltage	—	7.5	—	36.0	V
$I_{IN(VM_ACT)}$	Supply Current When Voltage Monitor is Activated	EN_S=1	6	11	16	μA
$I_{IN(STB)}$	Supply Current – Standby	B2=B1=B0=EN_S=0, V_{DN0}=V_{DCN}=0V	—	3.5	6.0	μA
$I_{IN(STB_DSG)}$	VIN Supply Current When DGN0 is Activated	B2=B1=B0=EN_S=0, V_{DN0}=5V, V_{DCN}=0V	—	35	42	μA
I_{SLP}	Standby Current in SLEEP Mode	V_{SLP}=5V, V_{HVWK}=0V	—	0.1	0.2	μA
Voltage Regulator						
V_{REG}	Regulator Output Voltage	I_{LOAD}=10mA	4.95	5.00	5.05	V
I_{REG}	Regulator Maximum Output Current	V_{IN}=7.5V, Ta=-40°C~85°C	50	—	—	mA
ΔV_{REG}	Load Regulation	I_{LOAD}=0mA~50mA	—	30	80	mV

Symbol	Parameter	Test Condition	Min.	Typ.	Max.	Unit
$\Delta V_{REG}/(V_{REG}\times\Delta V_{IN})$	Line Regulation	V_{IN}=7.5V~36V, I_{LOAD}=10mA	—	0.02	—	%/V
$\Delta V_{REG}/(V_{REG}\times\Delta Ta)$	Temperature Coefficient	I_{LOAD}=1mA, Ta=-40°C~85°C	—	±100	—	ppm/°C
R_{DIS}	VREG Discharge Resistance	SLP=1, V_{REG}=1V, I_{REG1} denotes VREG input current at V_{REG}=1V, $R_{DIS}=V_{REG}/I_{REG1}$	—	85	—	Ω
Charge Balancer						
R_{CB}	Charge Balance Resistance	V_{Bi}=4.5V (i=1~7), VBATn series resistors=0Ω	55	85	115	Ω
		V_{Bi}=2.5V (i=1~7), VBATn series resistors=0Ω	80	120	160	Ω
High Voltage Wake-Up						
V_{WKTH}	HVWK Trigger Threshold Voltage	—	4.5	5.5	6.5	V
t_{WKDB1}	HVWK Trigger Debounce Time	—	1	—	—	ms
I_{WK}	HVWK Input Current	V_{HVWK}=36V	—	50	—	μA
Accumulative Cell Voltage Monitor						
V_{Bi}	Cell Voltage	i=1~7	2.5	—	4.5	V
$V_{B(MIN)}$	Input Voltage between VBATi and VBAT(i-1) for Charge Balance and Voltage Monitor	—	1.5	—	—	V
$I_{Bi(PWR)}$	Cell Input Leakage Current When V_{IN} is Powered	V_{BATi}=5V×i, EN_S=0, $V_{IN}=V_{BAT7}$, i=1~7	-0.1	—	0.1	μA
$I_{Bi(ACT)}$	Cell Input Current When Voltage Monitoring	V_{Bi}=4.5V, EN_S=1, V_{IN}=36V, i=1~7	19	24	35	μA
R	Divided Resistance	—	140	200	260	kΩ
$Ratio7_{(NORM)}$	VBAT7 Accumulative Cell Voltage Divided Ratio (Normalized)	V_{BAT7}=17.5V~31.5V, B2~B0=0b110	0.995	1	1.005	V/V
		V_{BAT7}=17.5V~31.5V, B2~B0=0b110, Ta=-40°C~85°C	0.99	1	1.01	V/V
$Ratio6_{(NORM)}$	VBAT6 Accumulative Cell Voltage Divided Ratio (Normalized)	V_{BAT6}=15V~27V, B2~B0=0b101	0.995	1	1.005	V/V
		V_{BAT6}=15V~27V, B2~B0=0b101, Ta=-40°C~85°C	0.99	1	1.01	V/V
$Ratio5_{(NORM)}$	VBAT5 Accumulative Cell Voltage Divided Ratio (Normalized)	V_{BAT5}=12.5V~22.5V, B2~B0=0b100	0.995	1	1.005	V/V
		V_{BAT5}=12.5V~22.5V, B2~B0=0b100, Ta=-40°C~85°C	0.99	1	1.01	V/V
$Ratio4_{(NORM)}$	VBAT4 Accumulative Cell Voltage Divided Ratio (Normalized)	V_{BAT4}=10V~18V, B2~B0=0b011	0.995	1	1.005	V/V
		V_{BAT4}=10V~18V, B2~B0=0b011, Ta=-40°C~85°C	0.99	1	1.01	V/V
$Ratio3_{(NORM)}$	VBAT3 Accumulative Cell Voltage Divided Ratio (Normalized)	V_{BAT3}=7.5V~13.5V, B2~B0=0b010	0.995	1	1.005	V/V
		V_{BAT3}=7.5V~13.5V, B2~B0=0b010, Ta=-40°C~85°C	0.99	1	1.01	V/V
$Ratio2_{(NORM)}$	VBAT2 Accumulative Cell Voltage Divided Ratio (Normalized)	V_{BAT2}=5V~9V, B2~B0=0b001	0.995	1	1.005	V/V
		V_{BAT2}=5V~9V, B2~B0=0b001, Ta=-40°C~85°C	0.99	1	1.01	V/V
$Ratio1_{(NORM)}$	VBAT1 Accumulative Cell Voltage Divided Ratio (Normalized)	V_{BAT1}=2.5V~4.5V, B2~B0=0b000	0.995	1	1.005	V/V
		V_{BAT1}=2.5V~4.5V, B2~B0=0b000, Ta=-40°C~85°C	0.99	1	1.01	V/V
f_{MAX}	Voltage Monitor Channel to Channel Scan Frequency	C_{VOUT}=2.2nF	—	—	100	Hz

Symbol	Parameter	Test Condition	Min.	Typ.	Max.	Unit
Gate Drivers						
V_Z	DGNx Clamp Voltage	V_{DN0}=5V, V_{IN}>13V	10	12	16	V
		V_{DN0}=5V, V_{IN}≤13V	—	V_{IN}-0.7	—	V
	V(DGCN,DSCN) Clamp Voltage	V_{DCN}=5V, V_{IN}>15V	10	12	16	V
		V_{DCN}=5V, V_{IN}≤15V	—	V_{IN}-3.2	—	V
t_{r0}	DGN0 Rising Time	C_{DGN0}=15nF	—	0.5	1.0	μs
t_{f0}	DGN0 Falling Time	C_{DGN0}=15nF	—	0.5	1.0	μs
t_{PD_HL0}	DGN0 Falling Propagation Delay Time	C_{DGN0}=15nF	—	0.5	1.0	μs
t_{MM0}	DGN0 Delay Time Mismatch	C_{DGN0}=15nF, t_{MM0}=|t_{PD_LH0}-t_{PD_HL0}|	—	0.5	1.0	μs
$I_{SOURCE0}$	DGN0 Source Current	C_{DGN0}=1μF, peak current at DN0 rising edge (0→1)	—	850	—	mA
I_{SINK0}	DGN0 Sink Current	C_{DGN0}=1μF, peak current at DN0 falling edge (1→0)	—	400	—	mA
f_{PWM0}	DGN0 PWM Frequency	C_{DGN0}=15nF	—	—	10	kHz
f_{CP}	Charge Pump Switching Frequency	External capacitor is 22nF between C1 and C2	—	150	—	kHz
t_{rC}	Rising Time of The Voltage Difference between DGCN and DSCN	$C_{DGCN\text{-}DSCN}$=15nF, V_{IN}=36V	—	500	—	μs
t_{fC}	Falling Time of The Voltage Difference between DGCN and DSCN	$C_{DGCN\text{-}DSCN}$=15nF, V_{IN}=36V	—	5	10	μs
R_{PD}	DN0, DCN Pull-Down Resistance	—	—	430	—	kΩ
$R_{PL_SLP_G}$	DGCN Pull-Low Resistance in Sleep Mode	SLP=1, resistance between DGCN and GND	—	830	—	Ω
$R_{PL_SLP_S}$	DSCN Pull-Low Resistance in Sleep Mode	SLP=1, resistance between DSCN and GND	—	830	—	Ω
$R_{PL_SLP_GS}$	DGCN to DSCN Pull-Low Resistance in Sleep Mode	SLP=1, resistance between DGCN and DSCN	—	1.65	—	kΩ
$R_{PL_STB_G}$	DGCN Pull-Low Resistance in Standby Mode	SLP=0, V_{DCN}=0V, resistance between DGCN and GND	—	50	—	Ω
$R_{PL_STB_S}$	DSCN Pull-Low Resistance in Standby Mode	SLP=0, V_{DCN}=0V, resistance between DSCN and GND	—	50	—	Ω
$R_{PL_STB_GS}$	DGCN to DSCN Pull-Low Resistance in Standby Mode	SLP=0, V_{DCN}=0V, resistance between DGCN and DSCN	—	90	—	Ω
$R_{PL_S_0}$	DGN0 Pull-Low Resistance in Sleep and Standby Mode	V_{DN0}=0V, SLP=0 or 1, resistance between DGN0 and GND	—	5	—	Ω

Accumulative Cell Voltage Monitor I²C Interface Characteristics

V_{IN}=36V, Ta=25°C, unless otherwise specified

Symbol	Parameter	Test Condition	Min.	Typ.	Max.	Unit
R_{I2C_PU}	Pull-up Resistance	SDA and SCL lines	—	4.7	—	kΩ
f_{SCL}	Clock Frequency	—	—	—	400	kHz
t_{BMF}	Bus Free Time	Bus free time between STOP and START	1.3	—	—	μs
$t_{HD:STA}$	START Hold Time	After this period, the first clock pulse is generated	0.6	—	—	μs
t_{LOW}	SCL Low Time	—	1.3	—	—	μs

Symbol	Parameter	Test Condition	Min.	Typ.	Max.	Unit
t_{HIGH}	SCL High Time	—	0.6	—	—	μs
$t_{SU:STA}$	START Setup Time	Only relevant for Repeated START	0.6	—	—	μs
$t_{HD:DAT}$	Data Hold Time	—	0	—	—	ns
$t_{SU:DAT}$	Data Setup Time	—	100	—	—	ns
t_{R_I2C}	Rising Time	SDA and SCL (Note)	—	—	0.3	μs
t_{F_I2C}	Falling Time	SDA and SCL (Note)	—	—	0.3	μs
$t_{SU:STO}$	STOP Setup Time	—	0.6	—	—	μs
t_{AA}	Output Valid from Clock	—	—	—	0.9	μs
t_{SP}	Input Filter Time Constant	SDA and SCL noise suppression time	—	—	20	ns
t_{OUT}	I²C Time Out	—	—	32	—	ms

Note: These parameters are periodically sampled but not 100% tested.

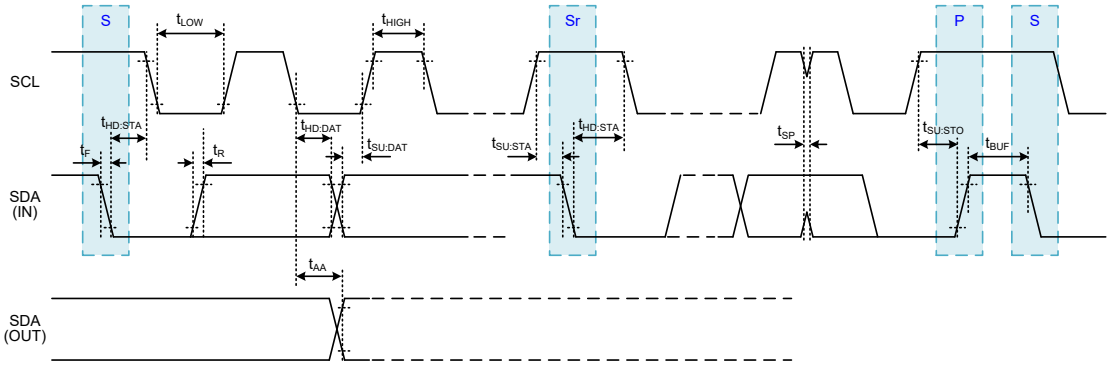

I²C Electrical Characteristics

Ta=25°C

Symbol	Parameter	Test Conditions		Min.	Typ.	Max.	Unit
		V_{DD}	Conditions				
f_{I2C}	I²C Standard Mode (100kHz) f_{SYS} Frequency (Note)	—	No clock debounce	2	—	—	MHz
			2 system clock debounce	4	—	—	
			4 system clock debounce	4	—	—	
	I²C Fast Mode (400kHz) f_{SYS} Frequency (Note)	—	No clock debounce	4	—	—	MHz
			2 system clock debounce	8	—	—	
			4 system clock debounce	8	—	—	
f_{SCL}	SCL Clock Frequency	3V/5V	Standard mode	—	—	100	kHz
			Fast mode	—	—	400	
$t_{SCL(H)}$	SCL Clock High Time	3V/5V	Standard mode	3.5	—	—	μs
			Fast mode	0.9	—	—	
$t_{SCL(L)}$	SCL Clock Low Time	3V/5V	Standard mode	3.5	—	—	μs
			Fast mode	0.9	—	—	
t_{FALL}	SCL and SDA Fall Time	3V/5V	Standard mode	—	—	1.3	μs
			Fast mode	—	—	0.34	
t_{RISE}	SCL and SDA Rise Time	3V/5V	Standard mode	—	—	1.3	μs
			Fast mode	—	—	0.34	
$t_{SU(SDA)}$	SDA Data Setup Time	3V/5V	Standard mode	0.25	—	—	μs
			Fast mode	0.1	—	—	
$t_{H(SDA)}$	SDA Data Hold Time	3V/5V	—	0.1	—	—	μs

Symbol	Parameter	Test Conditions		Min.	Typ.	Max.	Unit
		V_{DD}	Conditions				
$t_{VD(SDA)}$	SDA Data Valid Time	3V/5V	—	—	—	0.6	μs
$t_{SU(STA)}$	Start Condition Setup Time	3V/5V	Standard mode	3.5	—	—	μs
			Fast mode	0.6	—	—	
$t_{H(STA)}$	Start Condition Hold Time	3V/5V	Standard mode	4.0	—	—	μs
			Fast mode	0.6	—	—	
$t_{SU(STO)}$	Stop Condition Setup Time	3V/5V	Standard mode	3.5	—	—	μs
			Fast mode	0.6	—	—	

Note: Using the debounce function can make the transmission more stable and reduce the probability of communication failure due to interference.

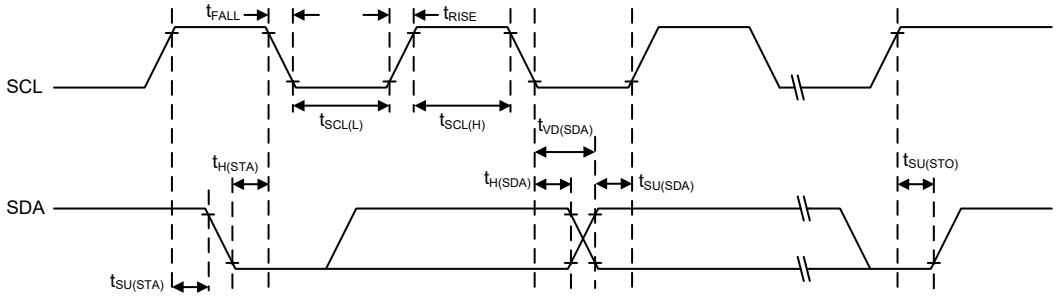

I²C Timing Diagram

Power-on Reset Characteristics

Ta=-40°C~85°C

Symbol	Parameter	Test Conditions		Min.	Typ.	Max.	Unit
		V_{DD}	Conditions				
V_{POR}	V_{DD} Start Voltage to Ensure Power-on Reset	—	—	—	—	100	mV
RR_{POR}	V_{DD} Rising Rate to Ensure Power-on Reset	—	—	0.035	—	—	V/ms
t_{POR}	Minimum Time for V_{DD} Stays at V_{POR} to Ensure Power-on Reset	—	—	1	—	—	ms

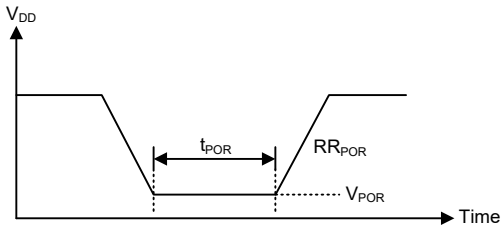

System Architecture

A key factor in the high-performance features of the Holtek range of microcontrollers is attributed to their internal system architecture. This device takes advantage of the usual features found within RISC microcontrollers providing increased speed of operation and enhanced performance. The pipelining scheme is implemented in such a way that instruction fetching and instruction execution are overlapped, hence instructions are effectively executed in one or two cycles for most of the standard or extended instructions respectively. The exceptions to these are branch or call instructions which need one more cycle. An 8-bit wide ALU is used in practically all instruction set operations, which carries out arithmetic operations, logic operations, rotation, increment, decrement, branch decisions, etc. The internal data path is simplified by moving data through the Accumulator and the ALU. Certain internal registers are implemented in the Data Memory and can be directly or indirectly addressed. The simple addressing methods of these registers along with additional architectural features ensure that a minimum of external components is required to provide a functional I/O and A/D control system with maximum reliability and flexibility. This makes the device suitable for affordable, high-volume production for controller applications.

Clocking and Pipelining

The main system clock, derived from either an HIRC or LIRC oscillator is subdivided into four internally generated non-overlapping clocks, T1~T4. The Program Counter is incremented at the beginning of the T1 clock during which time a new instruction is fetched. The remaining T2~T4 clocks carry out the decoding and execution functions. In this way, one T1~T4 clock cycle forms one instruction cycle. Although the fetching and execution of instructions takes place in consecutive instruction cycles, the pipelining structure of the microcontroller ensures that instructions are effectively executed in one instruction cycle. The exception to this are instructions where the contents of the Program Counter are changed, such as subroutine calls or jumps, in which case the instruction will take one more instruction cycle to execute.

For instructions involving branches, such as jump or call instructions, two machine cycles are required to complete instruction execution. An extra cycle is required as the program takes one cycle to first obtain the actual jump or call address and then another cycle to actually execute the branch. The requirement for this extra cycle should be taken into account by programmers in timing sensitive applications.

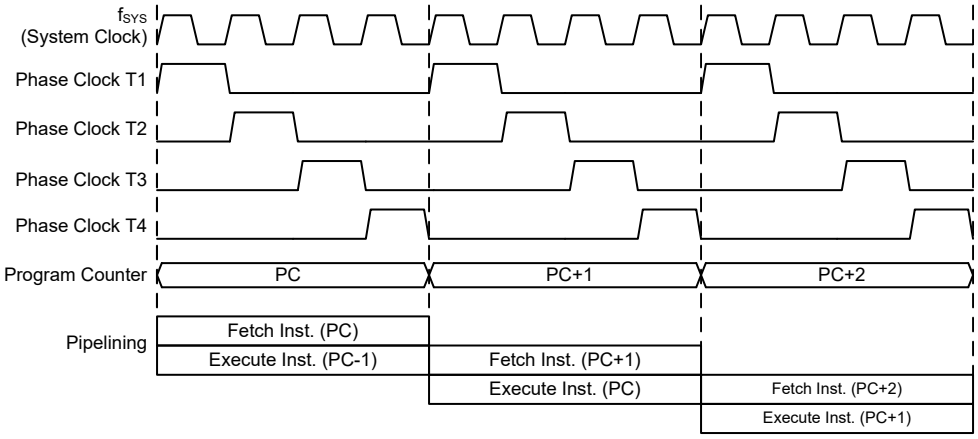

System Clocking and Pipelining

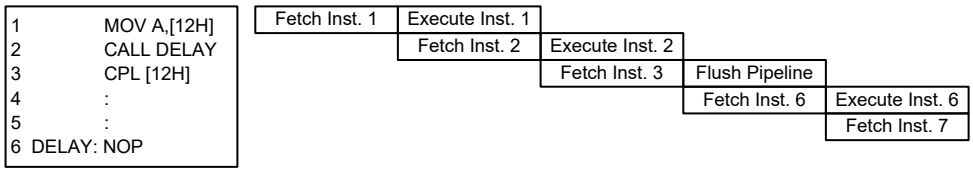

Instruction Fetching

Program Counter

During program execution, the Program Counter is used to keep track of the address of the next instruction to be executed. It is automatically incremented by one each time an instruction is executed except for instructions, such as "JMP" or "CALL" that demands a jump to a non-consecutive Program Memory address. Only the lower 8 bits, known as the Program Counter Low Register, are directly addressable by the application program.

When executing instructions requiring jumps to non-consecutive addresses such as a jump instruction, a subroutine call, interrupt or reset, etc., the microcontroller manages program control by loading the required address into the Program Counter. For conditional skip instructions, once the condition has been met, the next instruction, which has already been fetched during the present instruction execution, is discarded and a dummy cycle takes its place while the correct instruction is obtained.

Program Counter	
High Byte	**Low Byte (PCL)**
PC11~PC8	PCL7~PCL0

Program Counter

The lower byte of the Program Counter, known as the Program Counter Low register or PCL, is available for program control and is a readable and writeable register. By transferring data directly into this register, a short program jump can be executed directly. However, as only this low byte is available for manipulation, the jumps are limited to the present page of memory that is 256 locations. When such program jumps are executed it should also be noted that a dummy cycle will be inserted. Manipulating the PCL register may cause program branching, so an extra cycle is needed to pre-fetch.

Stack

This is a special part of the memory which is used to save the contents of the Program Counter only. The stack is organized into 8 levels and neither part of the data nor part of the program space, and is neither readable nor writeable. The activated level is indexed by the Stack Pointer, and is neither readable nor writeable. At a subroutine call or interrupt acknowledge signal, the contents of the Program Counter are pushed onto the stack. At the end of a subroutine or an interrupt routine, signaled by a return instruction, RET or RETI, the Program Counter is restored to its previous value from the stack. After a device reset, the Stack Pointer will point to the top of the stack.

If the stack is full and an enabled interrupt takes place, the interrupt request flag will be recorded but the acknowledge signal will be inhibited. When the Stack Pointer is decremented, by RET or RETI, the interrupt will be serviced. This feature prevents stack overflow allowing the programmer to use the structure more easily. However, when the stack is full, a CALL subroutine instruction can still be executed which will result in a stack overflow. Precautions should be taken to avoid such cases which might cause unpredictable program branching.

If the stack is overflow, the first Program Counter save in the stack will be lost.

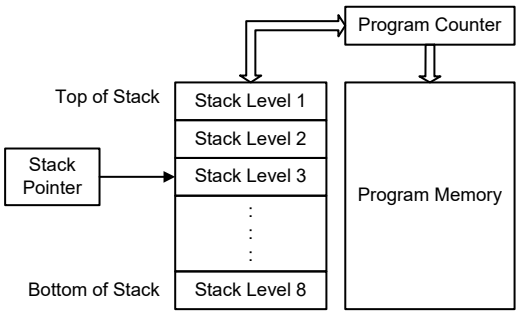

Arithmetic and Logic Unit – ALU

The arithmetic-logic unit or ALU is a critical area of the microcontroller that carries out arithmetic and logic operations of the instruction set. Connected to the main microcontroller data bus, the ALU receives related instruction codes and performs the required arithmetic or logical operations after which the result will be placed in the specified register. As these ALU calculation or operations may result in carry, borrow or other status changes, the status register will be correspondingly updated to reflect these changes. The ALU supports the following functions:

- Arithmetic operations:
  ADD, ADDM, ADC, ADCM, SUB, SUBM, SBC, SBCM, DAA,
  LADD, LADDM, LADC, LADCM, LSUB, LSUBM, LSBC, LSBCM, LDAA
- Logic operations:
  AND, OR, XOR, ANDM, ORM, XORM, CPL, CPLA,
  LAND, LOR, LXOR, LANDM, LORM, LXORM, LCPL, LCPLA
- Rotation:
  RRA, RR, RRCA, RRC, RLA, RL, RLCA, RLC,
  LRR, LRRA, LRRCA, LRRC, LRLA, LRL, LRLCA, LRLC
- Increment and Decrement:
  INCA, INC, DECA, DEC,
  LINCA, LINC, LDECA, LDEC
- Branch decision:
  JMP, SZ, SZA, SNZ, SIZ, SDZ, SIZA, SDZA, CALL, RET, RETI,
  LSZ, LSZA, LSNZ, LSIZ, LSDZ, LSIZA, LSDZA

Flash Program Memory

The Program Memory is the location where the user code or program is stored. For this device the Program Memory is Flash type, which means it can be programmed and re-programmed a large number of times, allowing the user the convenience of code modification on the same device. By using the appropriate programming tools, the Flash device offers users the flexibility to conveniently debug and develop their applications while also offering a means of field programming and updating.

Structure

The Program Memory has a capacity of 4K×16 bits. The Program Memory is addressed by the Program Counter and also contains data, table information and interrupt entries. Table data, which can be arranged in any location within the Program Memory, is addressed by a separate table pointer register.

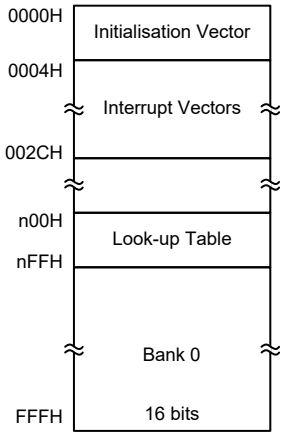

Program Memory Structure

Special Vectors

Within the Program Memory, certain locations are reserved for the reset and interrupts. The location 0000H is reserved for use by the device reset for program initialisation. After a device reset is initiated, the program will jump to this location and begin execution.

Look-up Table

Any location within the Program Memory can be defined as a look-up table where programmers can store fixed data. To use the look-up table, the table pointer must first be configured by placing the address of the look up data to be retrieved in the table pointer registers, TBLP and TBHP. These registers define the total address of the look-up table.

After setting up the table pointer, the table data can be retrieved from the Program Memory using the corresponding table read instruction such as “TABRD [m]” or “TABRDL [m]” respectively when the memory [m] is located in Sector 0. If the data table is located in other sectors, the data can be retrieved from the program memory using the corresponding extended table read instruction such as “LTABRD [m]” or “LTABRDL [m]” respectively. When the instruction is executed, the lower order table byte from the Program Memory will be transferred to the user defined Data Memory register [m] as specified in the instruction. The higher order table data byte from the Program Memory will be transferred to the TBLH special register. Any unused bits in this transferred higher order byte will be read as “0”.

The accompanying diagram illustrates the addressing data flow of the look-up table.

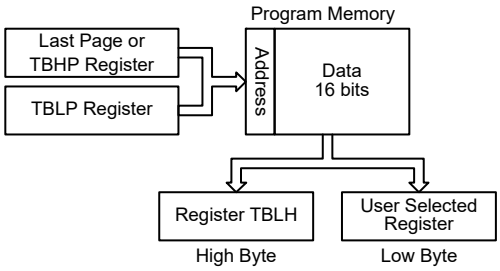

Table Program Example

The following example shows how the table pointer and table data is defined and retrieved from the microcontroller. This example uses raw table data located in the Program Memory which is stored there using the ORG statement. The value at this ORG statement is "0F00H" which refers to the start address of the last page within the 4K words Program Memory of these device. The table pointer low byte register is set here to have an initial value of "06H". This will ensure that the first data read from the data table will be at the Program Memory address "0F06H" or 6 locations after the start of the last page. Note that the value for the table pointer is referenced to the specific address pointed by the TBLP and TBHP registers if the "TABRD [m]" or "LTABRD [m]" instruction is being used. The high byte of the table data which in this case is equal to zero will be transferred to the TBLH register automatically when the "TABRD [m]" instruction is executed.

Because the TBLH register is a read/write register and can be restored, care should be taken to ensure its protection if both the main routine and Interrupt Service Routine use table read instructions. If using the table read instructions, the Interrupt Service Routines may change the value of the TBLH and subsequently cause errors if used again by the main routine. As a rule it is recommended that simultaneous use of the table read instructions should be avoided. However, in situations where simultaneous use cannot be avoided, the interrupts should be disabled prior to the execution of any main routine table-read instructions. Note that all table related instructions require two instruction cycles to complete their operation.

Table Read Program Example

```
tempreg1 db ?      ; temporary register #1
tempreg2 db ?      ; temporary register #2
:
:
mov a,06h          ; initialise low table pointer - note that this address is referenced
mov tblp,a         ; to the last page or the page that tbhp pointed
mov a,0Fh          ; initialise high table pointer
mov tbhp,a
:
:
tabrd tempreg1     ; transfers value in table referenced by table pointer,
                   ; data at program memory address "0F06H" transferred to tempreg1 and
                   ; TBLH
dec tblp           ; reduce value of table pointer by one
tabrd tempreg2     ; transfers value in table referenced by table pointer,
                   ; data at program memory address "0F05H" transferred to tempreg2 and
TBLH
                   ; in this example the data "1AH" is transferred to tempreg1 and data "0FH"
                   ; to register tempreg2
                   ; the value "00H" will be transferred to the high byte register TBLH
:
:
```

```
org 0F00h          ; sets initial address of program memory
dc 00Ah, 00Bh, 00Ch, 00Dh, 00Eh, 00Fh, 01Ah, 01Bh
:
```

In Circuit Programming – ICP

The provision of Flash type Program Memory provides the user with a means of convenient and easy upgrades and modifications to their programs on the same device.

As an additional convenience, a means of programming the microcontroller in-circuit has provided using a 4-pin interface. This provides manufacturers with the possibility of manufacturing their circuit boards complete with a programmed or un-programmed microcontroller, and then programming or upgrading the program at a later stage. This enables product manufacturers to easily keep their manufactured products supplied with the latest program releases without removal and re-insertion of the device.

Holtek Writer Pins	MCU Programming Pins	Pin Description
ICPDA	PA0	Programming Serial Data/Address
ICPCK	PA2	Programming Clock
VDD	VDD	Power Supply
VSS	VSS	Power Ground

The Program Memory can be programmed serially in-circuit using this 4-wire interface. Data is downloaded and uploaded serially on a single pin with an additional line for the clock. Two additional lines are required for the power supply. The technical details regarding the in-circuit programming of the device are beyond the scope of this document and will be supplied in supplementary literature.

During the programming process, the user can take care of the ICPDA and ICPCK pins for data and clock programming purposes to ensure that no other outputs are connected to these two pins.

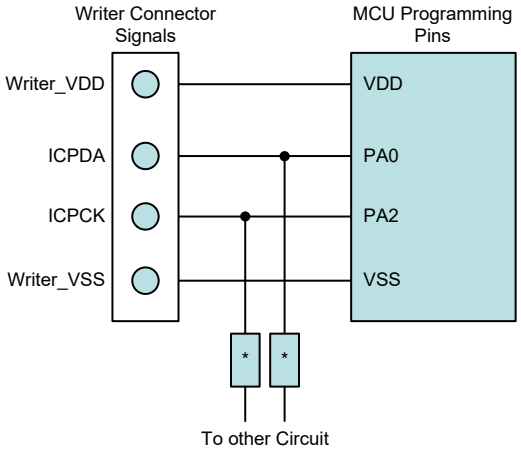

Note: * may be resistor or capacitor. The resistance of * must be greater than 1kΩ or the capacitance of * must be less than 1nF.

On-Chip Debug Support – OCDS

There is an EV chip named HT45V8640 which is used to emulate the real MCU device named HT45F8640. The EV chip device also provides an "On-Chip Debug" function to debug the real MCU device during the development process. The EV chip and the real MCU device are almost functionally compatible except for "On-Chip Debug" function. Users can use the EV chip device to emulate the real chip device behavior by connecting the OCDSDA and OCDSCK pins to the Holtek HT-IDE development tools. The OCDSDA pin is the OCDS Data/Address input/output pin while the OCDSCK pin is the OCDS clock input pin. When users use the EV chip for debugging, other functions which are shared with the OCDSDA and OCDSCK pins in the device will have no effect in the EV chip. However, the two OCDS pins which are pin-shared with the ICP programming pins are still used as the Flash Memory programming pins for ICP. For more detailed OCDS information, refer to the corresponding document named "Holtek e-Link for 8-bit MCU OCDS User's Guide".

Holtek e-Link Pins	EV Chip Pins	Pin Description
OCDSDA	OCDSDA	On-chip Debug Support Data/Address input/output
OCDSCK	OCDSCK	On-chip Debug Support Clock input
VDD	VDD	Power Supply
VSS	VSS	Power Ground

In Application Programming – IAP

Flash type Program Memory provides the user with a means of convenient and easy upgrades and modifications to their programs on the same device. The provision of the IAP function offers users the convenience of Flash Memory multi-programming features. The convenience of the IAP function is that it can execute the updated program procedure using its internal firmware, without requiring an external Program Writer or PC. In addition, the IAP interface can also be any type of communication protocol, such as UART, using I/O pins. Regarding the internal firmware, the user can select versions provided by Holtek or create their own. The following section illustrates the procedures regarding how to implement the IAP firmware.

Flash Memory Read/Write Size

The Flash Memory Erase and Write operations are carried out in a page format while the Read operation is carried out in a word format. The page size and write buffer size are both assigned with a capacity of 32 words. Note that the Erase operation should be executed before the Write operation is executed.

When the Flash Memory Erase/Write Function is successfully enabled, the CFWEN bit will be set high. When the CFWEN bit is set high, the data can be written into the write buffer. The FWT bit is used to initiate the write process and then indicate the write operation status. This bit is set high by application programs to initiate a write process and will be cleared by hardware if the write process is finished.

The Read operation can be carried out by executing a specific read procedure. The FRDEN bit is used to enable the read function and the FRD bit is used to initiate the read process by application programs and then indicate the read operation status. When the read process is finished, this bit will be cleared by hardware.

Operations	Format
Erase	32 words/page
Write	32 words/time
Read	1 word/time
Note: Page size=Write buffer size=32 words.	

IAP Operation Format

Page	FARH	FARL[7:5]	FARL[4:0]
0	0000 0000	000	Tag Address
1	0000 0000	001	
2	0000 0000	010	
3	0000 0000	011	
4	0000 0000	100	
: :	: :	: :	
126	0000 1111	110	
127	0000 1111	111	

Page Number and Address Selection

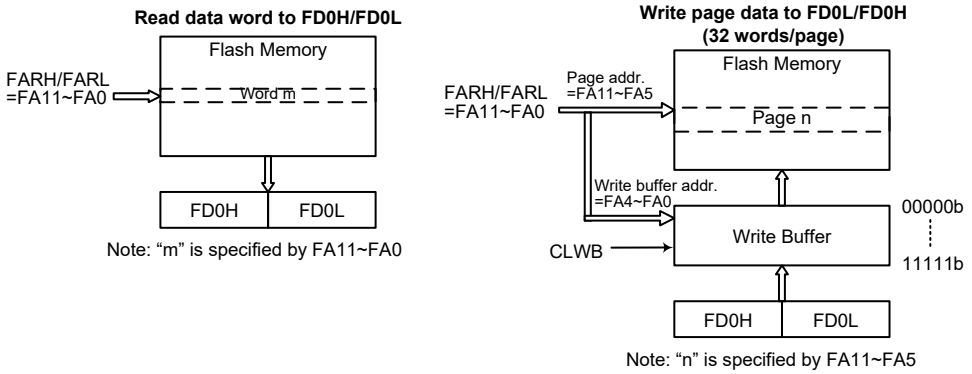

Flash Memory IAP Read/Write Structure

Write Buffer

The write buffer is used to store the written data temporarily when executing the write operation. The Write Buffer can be filled with written data after the Flash Memory Erase/Write Function has been successfully enabled by executing the Flash Memory Erase/Write Function Enable procedure. The write buffer can be cleared by configuring the CLWB bit in the FC2 register. The CLWB bit can be set high to enable the Clear Write Buffer procedure. When the procedure is finished this bit will be cleared to low by the hardware. It is recommended that the write buffer should be cleared by setting the CLWB bit high before the write buffer is used for the first time or when the data in the write buffer is updated.

The write buffer size is 32 words corresponding to a page. The write buffer address is mapped to a specific flash memory page specified by the memory address bits, FA11~FA5. The data written into the FD0L and FD0H registers will be loaded into the write buffer. When data is written into the high byte data register, FD0H, it will result in the data stored in the high and low byte data registers both being written into the write buffer. It will also cause the flash memory address to be incremented by one, after which the new address will be loaded into the FARH and FARL address registers. When the flash memory address reaches the page boundary, 11111b of a page with 32 words, the address will now not be incremented but will stop at the last address of the page. At this point a new page address should be specified for any other erase/write operations.

After a write process is finished, the write buffer will automatically be cleared by the hardware. Note that the write buffer should be cleared manually by the application program when the data written into the flash memory is incorrect in the data verification step. The data should again be written into the write buffer after the write buffer has been cleared when the data is found to be incorrect during the data verification step.

IAP Flash Program Memory Registers

There are two address registers, four 16-bit data registers and three control registers. All the registers are located in Sector 0. Read and Write operations to the Flash memory are carried out by 16-bit data operations using the address and data registers and the control register. Several registers control the overall operation of the internal Flash Program Memory. The address registers are named FARL and FARH, the data registers are named FDnL and FDnH and the control registers are named FC0, FC1 and FC2.

Register Name	Bit							
	7	6	5	4	3	2	1	0
FC0	CFWEN	FMOD2	FMOD1	FMOD0	FWPEN	FWT	FRDEN	FRD
FC1	D7	D6	D5	D4	D3	D2	D1	D0
FC2	—	—	—	—	—	—	—	CLWB
FARL	FA7	FA6	FA5	FA4	FA3	FA2	FA1	FA0
FARH	—	—	—	—	FA11	FA10	FA9	FA8
FD0L	D7	D6	D5	D4	D3	D2	D1	D0
FD0H	D15	D14	D13	D12	D11	D10	D9	D8
FD1L	D7	D6	D5	D4	D3	D2	D1	D0
FD1H	D15	D14	D13	D12	D11	D10	D9	D8
FD2L	D7	D6	D5	D4	D3	D2	D1	D0
FD2H	D15	D14	D13	D12	D11	D10	D9	D8
FD3L	D7	D6	D5	D4	D3	D2	D1	D0
FD3H	D15	D14	D13	D12	D11	D10	D9	D8

IAP Register List

- **FARL Register**

Bit	7	6	5	4	3	2	1	0
Name	FA7	FA6	FA5	FA4	FA3	FA2	FA1	FA0
R/W	R/W	R/W	R/W	R/W	R/W	R/W	R/W	R/W
POR	0	0	0	0	0	0	0	0

Bit 7~0 **FA7~FA0**: Flash Memory Address bit 7~bit 0

- **FARH Register**

Bit	7	6	5	4	3	2	1	0
Name	—	—	—	—	FA11	FA10	FA9	FA8
R/W	—	—	—	—	R/W	R/W	R/W	R/W
POR	—	—	—	—	0	0	0	0

Bit 7~4 Unimplemented, read as “0”

Bit 3~0 **FA11~FA8**: Flash Memory Address bit 11~bit 8

- **FD0L Register**

Bit	7	6	5	4	3	2	1	0
Name	D7	D6	D5	D4	D3	D2	D1	D0
R/W	R/W	R/W	R/W	R/W	R/W	R/W	R/W	R/W
POR	0	0	0	0	0	0	0	0

Bit 7~0 **D7~D0**: The first Flash Memory data bit 7~bit 0

Note that data written into the low byte data register FD0L will only be stored in the FD0L register and not loaded into the lower 8-bit write buffer.

• **FD0H Register**

Bit	7	6	5	4	3	2	1	0
Name	D15	D14	D13	D12	D11	D10	D9	D8
R/W	R/W	R/W	R/W	R/W	R/W	R/W	R/W	R/W
POR	0	0	0	0	0	0	0	0

Bit 7~0 **D15~D8**: The first Flash Memory data bit 15~bit 8

Note that when 8-bit data is written into the high byte data register FD0H, the whole 16 bits of data stored in the FD0H and FD0L registers will simultaneously be loaded into the 16-bit write buffer after which the contents of the Flash memory address register pair, FARH and FARL, will be incremented by one.

• **FD1L Register**

Bit	7	6	5	4	3	2	1	0
Name	D7	D6	D5	D4	D3	D2	D1	D0
R/W	R/W	R/W	R/W	R/W	R/W	R/W	R/W	R/W
POR	0	0	0	0	0	0	0	0

Bit 7~0 **D7~D0**: The second Flash Memory data bit 7~bit 0

• **FD1H Register**

Bit	7	6	5	4	3	2	1	0
Name	D15	D14	D13	D12	D11	D10	D9	D8
R/W	R/W	R/W	R/W	R/W	R/W	R/W	R/W	R/W
POR	0	0	0	0	0	0	0	0

Bit 7~0 **D15~D8**: The second Flash Memory data bit 15~bit 8

• **FD2L Register**

Bit	7	6	5	4	3	2	1	0
Name	D7	D6	D5	D4	D3	D2	D1	D0
R/W	R/W	R/W	R/W	R/W	R/W	R/W	R/W	R/W
POR	0	0	0	0	0	0	0	0

Bit 7~0 **D7~D0**: The third Flash Memory data bit 7~bit 0

• **FD2H Register**

Bit	7	6	5	4	3	2	1	0
Name	D15	D14	D13	D12	D11	D10	D9	D8
R/W	R/W	R/W	R/W	R/W	R/W	R/W	R/W	R/W
POR	0	0	0	0	0	0	0	0

Bit 7~0 **D7~D0**: The third Flash Memory data bit 15~bit 8

• **FD3L Register**

Bit	7	6	5	4	3	2	1	0
Name	D7	D6	D5	D4	D3	D2	D1	D0
R/W	R/W	R/W	R/W	R/W	R/W	R/W	R/W	R/W
POR	0	0	0	0	0	0	0	0

Bit 7~0 **D7~D0**: The fourth Flash Memory data bit 7~bit 0

• **FD3H Register**

Bit	7	6	5	4	3	2	1	0
Name	D15	D14	D13	D12	D11	D10	D9	D8
R/W	R/W	R/W	R/W	R/W	R/W	R/W	R/W	R/W
POR	0	0	0	0	0	0	0	0

Bit 7~0 **D15~D8**: The fourth Flash Memory data bit 15~bit 8

• **FC0 Register**

Bit	7	6	5	4	3	2	1	0
Name	CFWEN	FMOD2	FMOD1	FMOD0	FWPEN	FWT	FRDEN	FRD
R/W	R/W	R/W	R/W	R/W	R/W	R/W	R/W	R/W
POR	0	0	0	0	0	0	0	0

Bit 7 **CFWEN**: Flash Memory Erase/Write function enable control
0: Flash Memory erase/write function is disabled
1: Flash Memory erase/write function has been successfully enabled

When this bit is cleared to zero by application program, the Flash Memory erase/write function is disabled. Note that this bit cannot be set high by application programs. Writing "1" into this bit results in no action. This bit is used to indicate that the Flash Memory erase/write function status. When this bit is set high by hardware, it means that the Flash Memory erase/write function is enabled successfully. Otherwise, the Flash Memory erase/write function is disabled as the bit content is zero.

Bit 6~4 **FMOD2~FMOD0**: Flash Memory Mode selection
000: Write Mode
001: Page Erase Mode
010: Reserved
011: Read Mode
100: Reserved
101: Reserved
110: Flash Memory Erase/Write function Enable Mode
111: Reserved

These bits are used to select the Flash Memory operation modes. Note that the "Flash memory Erase/Write function Enable Mode" should first be successfully enabled before the Erase or Write Flash memory operation is executed.

Bit 3 **FWPEN**: Flash Memory Erase/Write function enable procedure trigger
0: Erase/Write function enable procedure is not triggered or procedure timer times out
1: Erase/Write function enable procedure is triggered and procedure timer starts to count

This bit is used to activate the flash memory Erase/Write function enable procedure and an internal timer. It is set by the application programs and then cleared to zero by the hardware when the internal timer times out. The correct patterns must be written into the FD1L/FD1H, FD2L/FD2H and FD3L/FD3H register pairs respectively as soon as possible after the FWPEN bit is set high.

Bit 2 **FWT**: Flash Memory write initiate control
0: Do not initiate Flash Memory write or indicating that a Flash Memory write process has completed
1: Initiate a Flash Memory write process

This bit is set by software and cleared to zero by the hardware when the Flash memory write process has completed.

Bit 1 **FRDEN**: Flash Memory read enabled bit
0: Flash Memory read disable
1: Flash Memory read enable
This is the Flash Memory Read Enable bit which must be set high before any Flash memory read operations are carried out. Clearing this bit to zero will inhibit Flash memory read operations.

Bit 0 **FRD**: Flash Memory read control bit
0: Do not initiate Flash Memory read or indicating that a Flash Memory read process has completed
1: Initiate a Flash Memory read process
This bit is set by software and cleared to zero by the hardware when the Flash memory read process has completed.

Note: 1. The FWT, FRDEN and FRD bits cannot be set to "1" at the same time with a single instruction.
2. Ensure that the f_{SUB} clock is stable before executing the erase or write operation.
3. Note that the CPU will be stopped when a read, erase or write operation is successfully activated.
4. Ensure that the read, erase or write operation is totally complete before executing other operations.

• FC1 Register

Bit	7	6	5	4	3	2	1	0
Name	D7	D6	D5	D4	D3	D2	D1	D0
R/W	R/W	R/W	R/W	R/W	R/W	R/W	R/W	R/W
POR	0	0	0	0	0	0	0	0

Bit 7~0 **D7~D0**: Chip Reset Pattern
When a specific value of "55H" is written into this register, a reset signal will be generated to reset the whole chip.

• FC2 Register

Bit	7	6	5	4	3	2	1	0
Name	—	—	—	—	—	—	—	CLWB
R/W	—	—	—	—	—	—	—	R/W
POR	—	—	—	—	—	—	—	0

Bit 7~1 Unimplemented, read as "0"

Bit 0 **CLWB**: Flash Memory Write buffer clear control
0: Do not initiate a Write Buffer Clear process or indicating that a Write Buffer Clear process has completed
1: Initiate a Write Buffer Clear process
This bit is set by software and cleared to zero by hardware when the Write Buffer Clear process has completed.

Flash Memory Erase/Write Flow

It is important to understand the Flash memory Erase/Write flow before the Flash memory contents are updated. Users can refer to the corresponding operation procedures when developing their IAP program to ensure that the flash memory contents are correctly updated.

Flash Memory Erase/Write Flow Descriptions:

1. Activate the "Flash Memory Erase/Write function enable procedure" first. When the Flash Memory Erase/Write function is successfully enabled, the CFWEN bit in the FC0 register will automatically be set high by hardware. After this, Erase or Write operations can be executed on the Flash memory. Refer to the "Flash Memory Erase/Write Function Enable Procedure" for details.
2. Configure the flash memory address to select the desired erase page, tag address and then erase this page. For a page erase operation, set the FARL and FARH registers to specify the start address of the erase page, then write dummy data into the FD0H register to tag address. The current address will be internally incremented by one after each dummy data is written into the FD0H register. When the address reaches the page boundary, 11111b, the address will not be further incremented but stop at the last address of the page. Note that the write operation to the FD0H register is used to tag address, it must be implemented to determine which addresses to be erased.
3. Execute a Blank Check operation to ensure whether the page erase operation is successful or not. The "TABRD" instruction should be executed to read the flash memory contents and to check if the contents is 0000h or not. If the flash memory page erase operation fails, users should go back to Step 2 and execute the page erase operation again.
4. Write data into the specific page. Refer to the "Flash Memory Write Procedure" for details.
5. Execute the "TABRD" instruction to read the flash memory contents and check if the written data is correct or not. If the data read from the flash memory is different from the written data, it means that the page write operation has failed. The CLWB bit should be set high to clear the write buffer and then write the data into the specific page again if the write operation has failed.
6. Clear the CFWEN bit to disable the Flash Memory Erase/Write function enable mode if the current page Erase and Write operations are completed and no more pages need to be erased or written.

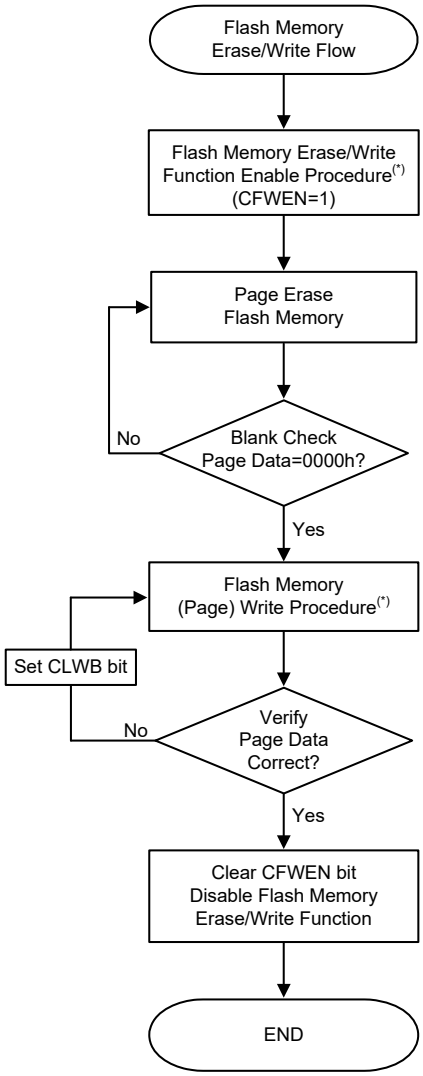

Flash Memory Erase/Write Flow

Note: *The Flash Memory Erase/Write Function Enable procedure and Flash Memory Write procedure will be described in the following sections.

Flash Memory Erase/Write Function Enable Procedure

The Flash Memory Erase/Write Function Enable Mode is specially designed to prevent the flash memory contents from being wrongly modified. In order to allow users to change the Flash memory data using the IAP control registers, users must first enable the Flash Memory Erase/Write function.

Flash Memory Erase/Write Function Enable Procedure Description

1. Write data “110” to the FMOD[2:0] bits in the FC0 register to select the Flash Memory Function Erase/Write Function Enable Mode.
2. Set the FWPEN bit in the FC0 register to “1” to activate the Flash Memory Erase/Write Enable Function. This will also activate an internal timer.
3. Write the correct data pattern into the Flash data registers, FD1L~FD3L and FD1H~FD3H, as soon as possible after the FWPEN bit is set high. The enable Flash memory erase/write function data pattern is 00H, 0DH, C3H, 04H, 09H and 40H corresponding to the FD1L~FD3L and FD1H~FD3H registers respectively.
4. Once the timer has timed out, the FWPEN bit will automatically be cleared to zero by hardware regardless of the input data pattern.
5. If the written data pattern is incorrect, the Flash memory erase/write function will not be enabled successfully and the above steps should be repeated. If the written data pattern is correct, the Flash memory erase/write function will be enabled successfully.
6. Once the Flash memory erase/write function is enabled, the Flash memory contents can be updated by executing the page erase and write operations using the IAP control registers.

   To disable the Flash memory erase/write function, the CFWEN bit in the FC0 register can be cleared. There is no need to execute the above procedure.

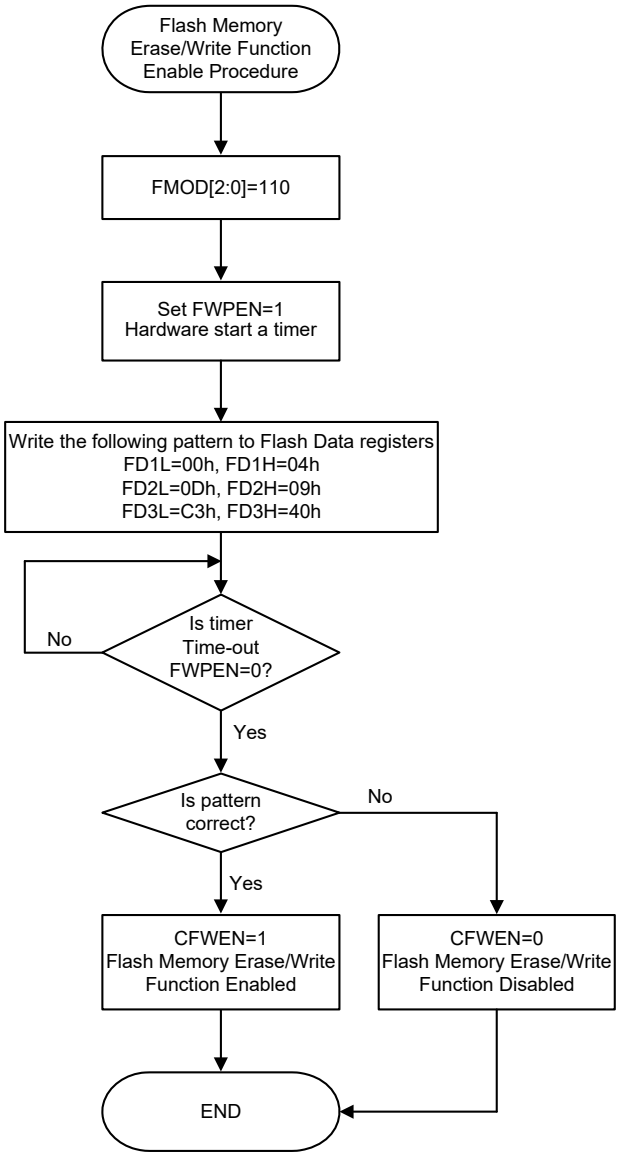

Flash Memory Erase/Write Function Enable Procedure

Flash Memory Write Procedure

After the Flash memory erase/write function has been successfully enabled as the CFWEN bit is set high, the data to be written into the flash memory can be loaded into the write buffer. The selected flash memory page data should be erased by properly configuring the IAP control registers before the data write procedure is executed.

The write buffer size is 32 words, known as a page, whose address is mapped to a specific flash memory page specified by the memory address bits, FA11~FA5. It is important to ensure that the page where the write buffer data is located is the same one which the memory address bits, FA11~FA5, specify.

Flash Memory Consecutive Write Description

The maximum amount of write data is 32 words for each write operation. The write buffer address will be automatically incremented by one when consecutive write operations are executed. The start address of a specific page should first be written into the FARL and FARH registers. Then the data word should first be written into the FD0L register and then the FD0H register. At the same time the write buffer address will be incremented by one and then the next data word can be written into the FD0L and FD0H registers for the next address without modifying the address register pair, FARH and FARL. When the write buffer address reaches the page boundary the address will not be further incremented but will stop at the last address of the page.

1. Activate the “Flash Memory Erase/Write function enable procedure”. Check the CFWEN bit value and then execute the erase/write operations if the CFWEN bit is set high. Refer to the “Flash Memory Erase/Write function enable procedure” for more details.
2. Set the FMOD field to “001” to select the erase operation and set the CLWB bit high to clear the write buffer. Set the FWT bit high to erase the desired page which is specified by the FARH and FARL registers and has been tagged address. Wait until the FWT bit goes low.
3. Execute a Blank Check operation using the table read instruction to ensure that the erase operation has successfully completed.

   Go to step 2 if the erase operation is not successful.

   Go to step 4 if the erase operation is successful.
4. Set the FMOD field to “000” to select the write operation.
5. Setup the desired start address in the FARH and FARL registers. Write the desired data words consecutively into the FD0L and FD0H registers within a page as specified by their consecutive addresses. The maximum written data number is 32 words.
6. Set the FWT bit high to write the data words from the write buffer to the flash memory. Wait until the FWT bit goes low.
7. Verify the data using the table read instruction to ensure that the write operation has successfully completed.

   If the write operation has not successfully completed, set the CLWB bit high to clear the write buffer and then go to step 5.

   Go to step 8 if the write operation is successful.
8. Clear the CFWEN bit low to disable the Flash memory erase/write function.

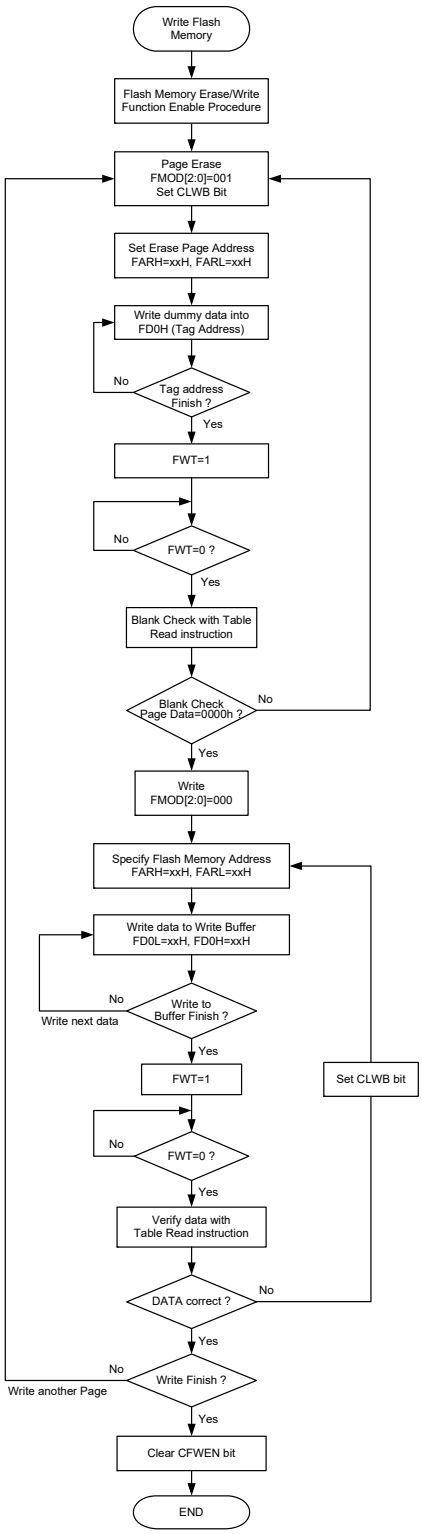

Flash Memory Consecutive Write Procedure

Note: 1. When the erase or write operation is successfully activated, all CPU operations will temporarily cease.

2. It will take certain time for the FWT bit state changing from high to low in the erase or write operation.

Flash Memory Non-Consecutive Write Description

The main difference between Flash Memory Consecutive and Non-Consecutive Write operations is whether the data words to be written are located in consecutive addresses or not. If the data to be written is not located in consecutive addresses the desired address should be re-assigned after a data word is successfully written into the Flash Memory.

A two data word non-consecutive write operation is taken as an example here and described as follows:

1. Activate the “Flash Memory Erase/Write function enable procedure”. Check the CFWEN bit value and then execute the erase/write operation if the CFWEN bit is set high. Refer to the “Flash Memory Erase/Write function enable procedure” for more details.
2. Set the FMOD field to “001” to select the erase operation and set the CLWB bit high to clear the write buffer. Set the FWT bit high to erase the desired page which is specified by the FARH and FARL registers and has been tagged address. Wait until the FWT bit goes low.
3. Execute a Blank Check operation using the table read instruction to ensure that the erase operation has successfully completed.

   Go to step 2 if the erase operation is not successful.

   Go to step 4 if the erase operation is successful.
4. Set the FMOD field to “000” to select the write operation.
5. Setup the desired address ADDR1 in the FARH and FARL registers. Write the desired data word DATA1 first into the FD0L register and then into the FD0H register.
6. Set the FWT bit high to transfer the data word from the write buffer to the flash memory. Wait until the FWT bit goes low.
7. Verify the data using the table read instruction to ensure that the write operation has successfully completed.

   If the write operation has not successfully completed, set the CLWB bit high to clear the write buffer and then go to step 5.

   Go to step 8 if the write operation is successful.
8. Setup the desired address ADDR2 in the FARH and FARL registers. Write the desired data word DATA2 first into the FD0L register and then into the FD0H register.
9. Set the FWT bit high to transfer the data word from the write buffer to the flash memory. Wait until the FWT bit goes low.
10. Verify the data using the table read instruction to ensure that the write operation has successfully completed.

    If the write operation has not successfully completed, set the CLWB bit high to clear the write buffer and then go to step 8.

    Go to step 11 if the write operation is successful.
11. Clear the CFWEN bit low to disable the Flash memory erase/write function.

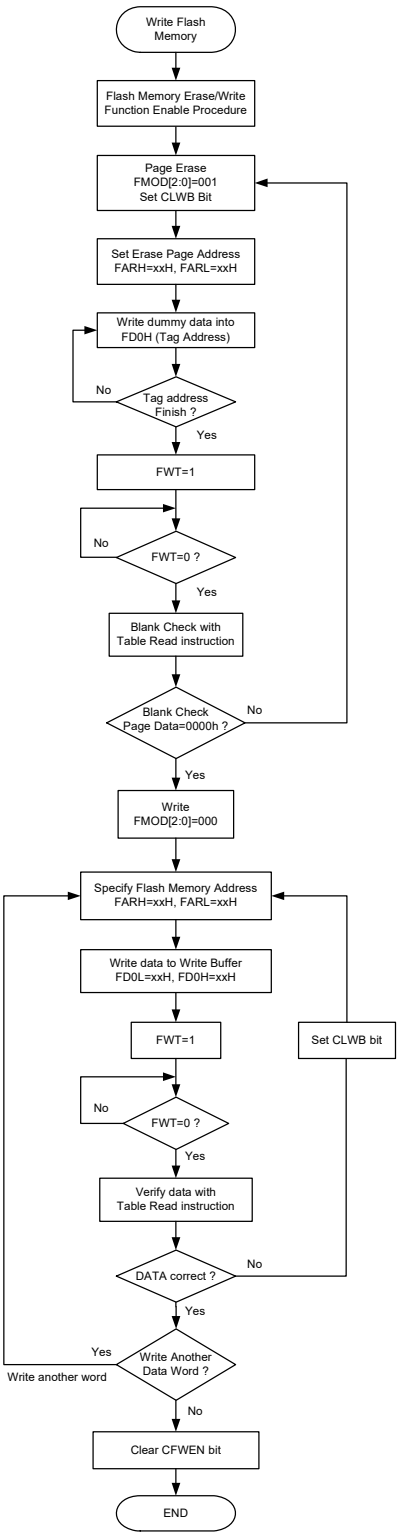

Flash Memory Non-Consecutive Write Procedure

Note: 1. When the erase or write operation is successfully activated, all CPU operations will temporarily cease.

2. It will take certain time for the FWT bit state changing from high to low in the erase or write operation.

Important Points to Note for Flash Memory Write Operations

1. The "Flash Memory Erase/Write Function Enable Procedure" must be successfully activated before the Flash Memory erase/write operation is executed.
2. The Flash Memory erase operation is executed to erase a whole page.
3. The whole write buffer data will be written into the flash memory in a page format. The corresponding address cannot exceed the page boundary.
4. After the data is written into the flash memory the flash memory contents must be read out using the table read instruction, TABRD, and checked if it is correct or not. If the data written into the flash memory is incorrect, the write buffer should be cleared by setting the CLWB bit high and then write the data again into the write buffer. Then activate a write operation on the same flash memory page without erasing it. The data check, buffer clear and data re-write steps should be repeatedly executed until the data written into the flash memory is correct.
5. The system frequency should be setup to the maximum application frequency when data write and data check operations are executed using the IAP function.

Flash Memory Read Procedure

To activate the Flash Memory Read procedure, the FMOD field should be set to "011" to select the flash memory read mode and the FRDEN bit should be set high to enable the read function. The desired flash memory address should be written into the FARH and FARL registers and then the FRD bit should be set high. After this the flash memory read operation will be activated. The data stored in the specified address can be read from the data registers, FD0H and FD0L, when the FRD bit goes low. There is no need to first activate the Flash Memory Erase/Write Function Enable Procedure before the flash memory read operation is executed.

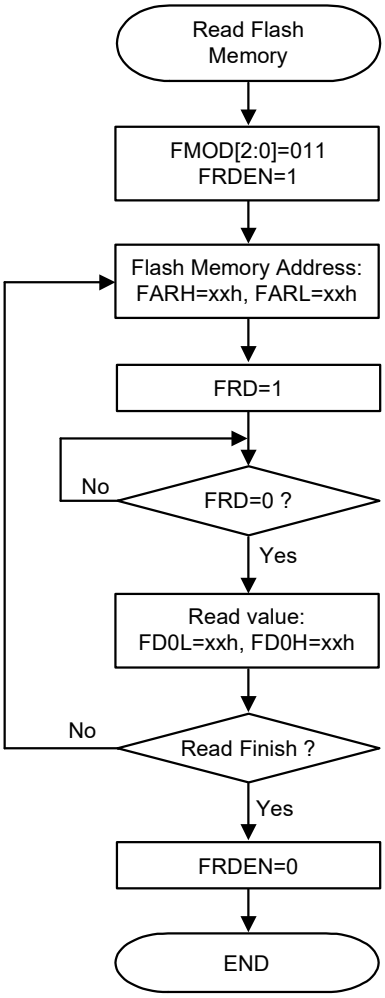

Flash Memory Read Procedure

Note: 1. When the read operation is successfully activated, all CPU operations will temporarily cease.

2. It will take a typical time of three instruction cycles for the FRD bit state changing from high to low.

Data Memory

The Data Memory is a volatile area of 8-bit wide RAM internal memory and is the location where temporary information is stored.

Categorised into two types, the first of these is an area of RAM, known as the Special Function Data Memory. These registers have fixed locations and are necessary for correct operation of the device. Many of these registers can be read from and written to directly under program control, however, some remain protected from user manipulation. The second area of Data Memory is known as the General Purpose Data Memory, which is reserved for general purpose use. All locations within this area are read and write accessible under program control.

Switching between the different Data Memory sectors is achieved by properly setting the Memory Pointers to correct value.

Structure

The Data Memory is subdivided into several sectors, all of which are implemented in 8-bit wide RAM. Each of the Data Memory Sector is categorized into two types, the special Purpose Data Memory and the General Purpose Data Memory. The address range of the Special Purpose Data Memory for the device is from 00H to 7FH while the General Purpose Data Memory address range is from 80H to FFH.

Special Purpose Data Memory	General Purpose Data Memory	
Located Sectors	Capacity	Sector: Address
0, 1	256×8	0: 80H~FFH 1: 80H~FFH

Data Memory Summary

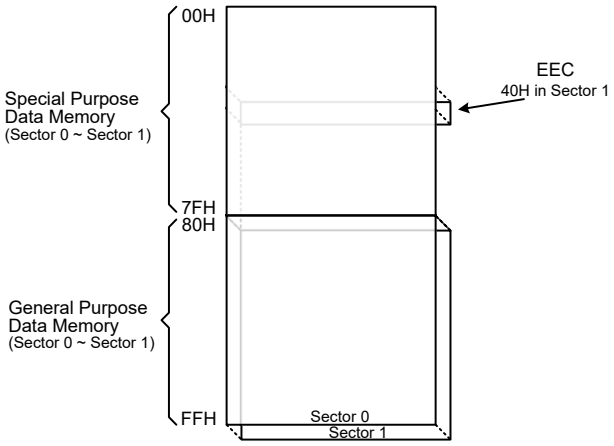

Data Memory Structure

Data Memory Addressing

For the device that support the extended instructions, there is no Bank Pointer for Data Memory addressing. The desired Sector is pointed by the MP1H or MP2H register and the certain Data Memory address in the selected sector is specified by the MP1L or MP2L register when using indirect addressing access.

Direct Addressing can be used in all sectors using the corresponding instruction which can address all available data memory space. For the accessed data memory which is located in any data memory sectors except Sector 0, the extended instructions can be used to access the data memory instead of using the indirect addressing access. The main difference between standard instructions and extended instructions is that the data memory address “m” in the extended instructions has 9 valid bits, the high byte indicates a sector and the low byte indicates a specific address within the sector.

General Purpose Data Memory

All microcontroller programs require an area of read/write memory where temporary data can be stored and retrieved for use later. It is this area of RAM memory that is known as General Purpose Data Memory. This area of Data Memory is fully accessible by the user programing for both reading and writing operations. By using the bit operation instructions individual bits can be set or reset under program control giving the user a large range of flexibility for bit manipulation in the Data Memory.

Special Purpose Data Memory

This area of Data Memory is where registers, necessary for the correct operation of the microcontroller, are stored. Most of the registers are both readable and writeable but some are protected and are readable only, the details of which are located under the relevant Special Function Register section. Note that for locations that are unused, any read instruction to these addresses will return the value “00H”.

	Sector 0	Sector 1
00H	IAR0	
01H	MP0	
02H	IAR1	
03H	MP1L	
04H	MP1H	
05H	ACC	
06H	PCL	
07H	TBLP	
08H	TBLH	
09H	TBHP	
0AH	STATUS	
0BH		
0CH	IAR2	
0DH	MP2L	
0EH	MP2H	
0FH	RSTFC	
10H	INTEG	
11H	INTC0	
12H	INTC1	
13H	INTC2	
14H	PA	
15H	PAC	
16H	PAPU	
17H	PAWU	
18H	LVDC	
19H	SCC	
1AH	WDTC	
1BH	TB0C	
1CH	HIRCC	
1DH	LVRC	
1EH	EEA	
1FH	EED	
20H	SADOL	
21H	SADOH	
22H	SADC0	
23H	SADC1	
24H	SADC2	
25H	PB	
26H	PBC	
27H	PBPU	
28H	CTMC0	
29H	CTMC1	
2AH	CTMDL	
2BH	CTMDH	
2CH	CTMAL	
2DH	CTMAH	
2EH	CTMRP	
2FH	STMC0	
30H	STMC1	
31H	STMDL	
32H	STMDH	
33H	STMAL	
34H	STMAH	
35H	STMRP	
36H		
37H	PTMC0	
38H	PTMC1	
39H	PTMDL	
3AH	PTMDH	
3BH	PTMAL	
3CH	PTMAH	
3DH	PTMRPL	
3EH	PTMRPH	
3FH		

	Sector 0	Sector 1
40H		EEC
41H	PC	
42H	PCC	
43H	PCPU	
44H		
45H	SIMC0	
46H	SIMC1	
47H	SIMD	
48H	SIMA	
49H	SIMTOC	
4AH	VBGRC	
4BH	TB1C	
4CH	MFI0	
4DH	MFI1	
4EH	MFI2	
4FH	SLEDC0	
50H	SLEDC1	
51H	IFS	
52H	PD	
53H	PDC	
54H	PDPU	
55H		
56H		
57H		
58H		
59H		
5AH	LVPUC	
5BH	PAS0	
5CH	PAS1	
5DH	PBS0	
5EH	PBS1	
5FH	PCS0	
60H	PCS1	
61H	PDS0	
62H		
63H		
64H		
65H		
66H	PSC0R	
67H	PSC1R	
68H	RSTC	
69H	FC0	
6AH	FC1	
6BH	FC2	
6CH	FARL	
6DH	FARH	
6EH	FD0L	
6FH	FD0H	
70H	FD1L	
71H	FD1H	
72H	FD2L	
73H	FD2H	
74H	FD3L	
75H	FD3H	
76H	UCR3	
77H		
78H		
79H		
7AH		
7BH		
7CH		
7DH		
7EH		
7FH		

: Unused, read as 00H

Special Purpose Data Memory Structure

Special Function Register Description

Most of the Special Function Register details will be described in the relevant functional section, however several registers require a separate description in this section.

Indirect Addressing Registers – IAR0, IAR1, IAR2

The Indirect Addressing Registers, IAR0, IAR1 and IAR2, although having their locations in normal RAM register space, do not actually physically exist as normal registers. The method of indirect addressing for RAM data manipulation uses these Indirect Addressing Registers and Memory Pointers, in contrast to direct memory addressing, where the actual memory address is specified. Actions on the IAR0, IAR1 and IAR2 registers will result in no actual read or write operation to these registers but rather to the memory location specified by their corresponding Memory Pointers, MP0, MP1L/MP1H or MP2L/MP2H. Acting as a pair, IAR0 and MP0 can together access data from Sector 0 while the IAR1 register together with the MP1L/MP1H register pair and IAR2 register together with the MP2L/MP2H register pair can access data from any Data Memory Sector. As the Indirect Addressing Registers are not physically implemented, reading the Indirect Addressing Registers will return a result of "00H" and writing to the registers will result in no operation.

Memory Pointers – MP0, MP1L/MP1H, MP2L/MP2H

Five Memory Pointers, known as MP0, MP1L, MP1H, MP2L, MP2H, are provided. These Memory Pointers are physically implemented in the Data Memory and can be manipulated in the same way as normal registers providing a convenient way with which to address and track data. When any operation to the relevant Indirect Addressing Registers is carried out, the actual address that the microcontroller is directed to is the address specified by the related Memory Pointer. MP0, together with Indirect Addressing Register, IAR0, are used to access data from Sector 0, while MP1L/MP1H together with IAR1 and MP2L/MP2H together with IAR2 are used to access data from all sectors according to the corresponding MP1H or MP2H register. Direct Addressing can be used in all sectors using the extended instruction which can address all available data memory space.

The following example shows how to clear a section of four Data Memory locations already defined as locations adres1 to adres4.

Indirect Addressing Program Example

Example 1

```
data .section ´data´
adres1   db ?
adres2   db ?
adres3   db ?
adres4   db ?
block    db ?
code .section at 0 ´code´
org 00h
start:
     mov a, 04h           ; setup size of block
     mov block, a
     mov a, offset adres1  ; Accumulator loaded with first RAM address
     mov mp0, a           ; setup memory pointer with first RAM address
loop:
     clr IAR0             ; clear the data at address defined by MP0
     inc mp0              ; increment memory pointer
     sdz block            ; check if last memory location has been cleared
     jmp loop
continue:
```

Example 2

```
data .section ´data´
adres1   db ?
adres2   db ?
adres3   db ?
adres4   db ?
block    db ?
code .section at 0 ´code´
org 00h
start:
     mov a, 04h                  ; setup size of block
     mov block, a
     mov a, 01h                  ; setup the memory sector
     mov mp1h, a
     mov a, offset adres1        ; Accumulator loaded with first RAM address
     mov mp1l, a                 ; setup memory pointer with first RAM address
loop:
     clr IAR1                    ; clear the data at address defined by MP1L
     inc mp1l                    ; increment memory pointer MP1L
     sdz block                   ; check if last memory location has been cleared
     jmp loop
continue:
```

The important point to note here is that in the example shown above, no reference is made to specific Data Memory addresses.

Direct Addressing Program Example using extended instructions

```
data .section ´data´
temp  db ?
code .section at 0 ´code´
org 00h
start:
     lmov a, [m]             ; move [m] data to acc
     lsub a, [m+1]           ; compare [m] and [m+1] data
     snz  c                  ; [m]>[m+1]?
     jmp  continue           ; no
     lmov a, [m]             ; yes, exchange [m] and [m+1] data
     mov  temp, a
     lmov a, [m+1]
     lmov [m], a
     mov  a, temp
     lmov [m+1], a
continue:
```

Note: Here “m” is a data memory address located in any data memory sectors. For example, m=1F0H, it indicates address 0F0H in Sector 1.

Accumulator – ACC

The Accumulator is central to the operation of any microcontroller and is closely related with operations carried out by the ALU. The Accumulator is the place where all intermediate results from the ALU are stored. Without the Accumulator it would be necessary to write the result of each calculation or logical operation such as addition, subtraction, shift, etc., to the Data Memory resulting in higher programming and timing overheads. Data transfer operations usually involve the temporary storage function of the Accumulator; for example, when transferring data between one user-defined register and another, it is necessary to do this by passing the data through the Accumulator as no direct transfer between two registers is permitted.

Program Counter Low Register – PCL

To provide additional program control functions, the low byte of the Program Counter is made accessible to programmers by locating it within the Special Purpose area of the Data Memory. By manipulating this register, direct jumps to other program locations are easily implemented. Loading a value directly into this PCL register will cause a jump to the specified Program Memory location, however, as the register is only 8-bit wide, only jumps within the current Program Memory page are permitted. When such operations are used, note that a dummy cycle will be inserted.

Look-up Table Registers – TBLP, TBHP, TBLH

These three special function registers are used to control operation of the look-up table which is stored in the Program Memory. TBLP and TBHP are the table pointers and indicate the location where the table data is located. Their value must be set before any table read commands are executed. Their value can be changed, for example using the "INC" or "DEC" instructions, allowing for easy table data pointing and reading. TBLH is the location where the high order byte of the table data is stored after a table read data instruction has been executed. Note that the lower order table data byte is transferred to a user defined location.

Status Register – STATUS

This 8-bit register contains the SC flag, CZ flag, zero flag (Z), carry flag (C), auxiliary carry flag (AC), overflow flag (OV), power down flag (PDF), and watchdog time-out flag (TO). These arithmetic/logical operation and system management flags are used to record the status and operation of the microcontroller.

With the exception of the TO and PDF flags, bits in the status register can be altered by instructions like most other registers. Any data written into the status register will not change the TO or PDF flag. In addition, operations related to the status register may give different results due to the different instruction operations. The TO flag can be affected only by a system power-up, a WDT time-out or by executing the "CLR WDT" or "HALT" instruction. The PDF flag is affected only by executing the "HALT" or "CLR WDT" instruction or during a system power-up.

The Z, OV, AC, C, SC and CZ flags generally reflect the status of the latest operations.

- C is set if an operation results in a carry during an addition operation or if a borrow does not take place during a subtraction operation; otherwise C is cleared. C is also affected by a rotate through carry instruction.
- AC is set if an operation results in a carry out of the low nibbles in addition, or no borrow from the high nibble into the low nibble in subtraction; otherwise AC is cleared.
- Z is set if the result of an arithmetic or logical operation is zero; otherwise Z is cleared.
- OV is set if an operation results in a carry into the highest-order bit but not a carry out of the highest-order bit, or vice versa; otherwise OV is cleared.
- PDF is cleared by a system power-up or executing the "CLR WDT" instruction. PDF is set by executing the "HALT" instruction.
- TO is cleared by a system power-up or executing the "CLR WDT" or "HALT" instruction. TO is set by a WDT time-out.
- CZ is the operational result of different flags for different instructions. Refer to register definitions for more details.
- SC is the result of the "XOR" operation which is performed by the OV flag and the MSB of the current instruction operation result.

In addition, on entering an interrupt sequence or executing a subroutine call, the status register will not be pushed onto the stack automatically. If the contents of the status registers are important and if the subroutine can corrupt the status register, precautions must be taken to correctly save it.

- **STATUS Register**

Bit	7	6	5	4	3	2	1	0
Name	SC	CZ	TO	PDF	OV	Z	AC	C
R/W	R/W	R/W	R	R	R/W	R/W	R/W	R/W
POR	x	x	0	0	x	x	x	x

"x": unknown

Bit 7 **SC**: The result of the "XOR" operation which is performed by the OV flag and the MSB of the instruction operation result

Bit 6 **CZ**: The operational result of different flags for different instructions
For SUB/SUBM/LSUB/LSUBM instructions, the CZ flag is equal to the Z flag.
For SBC/SBCM/LSBC/LSBCM instructions, the CZ flag is the "AND" operation result which is performed by the previous operation CZ flag and current operation zero flag.
For other instructions, the CZ flag will not be affected.

Bit 5 **TO**: Watchdog Time-Out flag
0: After power up or executing the "CLR WDT" or "HALT" instruction
1: A watchdog time-out occurred

Bit 4 **PDF**: Power down flag
0: After power up or executing the "CLR WDT" instruction
1: By executing the "HALT" instruction

Bit 3 **OV**: Overflow flag
0: No overflow
1: An operation results in a carry into the highest-order bit but not a carry out of the highest-order bit or vice versa.

Bit 2 **Z**: Zero flag
0: The result of an arithmetic or logical operation is not zero
1: The result of an arithmetic or logical operation is zero

Bit 1 **AC**: Auxiliary flag
0: No auxiliary carry
1: An operation results in a carry out of the low nibbles in addition, or no borrow from the high nibble into the low nibble in subtraction

Bit 0 **C**: Carry flag
0: No carry-out
1: An operation results in a carry during an addition operation or if a borrow does not take place during a subtraction operation
The C flag is also affected by a rotate through carry instruction.

EEPROM Data Memory

The device contains an area of internal EEPROM Data Memory. EEPROM is by its nature a non-volatile form of re-programmable memory, with data retention even when its power supply is removed. By incorporating this kind of data memory, a whole new host of application possibilities are made available to the designer. The availability of EEPROM storage allows information such as product identification numbers, calibration values, specific user data, system setup data or other product information to be stored directly within the product microcontroller. The process of reading and writing data to the EEPROM memory has been reduced to a very trivial affair.

EEPROM Data Memory Structure

The EEPROM Data Memory capacity is 128×8 bits for the device. Unlike the Program Memory and RAM Data Memory, the EEPROM Data Memory is not directly mapped into memory space and is therefore not directly addressable in the same way as the other types of memory. Read and Write operations to the EEPROM are carried out in single byte operations using an address and a data register in Sector 0 and a single control register in Sector 1.

EEPROM Registers

Three registers control the overall operation of the internal EEPROM Data Memory. These are the address register, EEA, the data register, EED and a single control register, EEC. As both the EEA and EED registers are located in Sector 0, they can be directly accessed in the same way as any other Special Function Register. The EEC register however, being located in Sector 1, can only be read from or written to indirectly using the MP1L/MP1H or MP2L/MP2H Memory Pointer and Indirect Addressing Register, IAR1/IAR2. Because the EEC control register is located at address 40H in Sector 1, the MP1L or MP2L Memory Pointer must first be set to the value 40H and the MP1H or MP2H Memory Pointer high byte set to the value, 01H, before any operations on the EEC register are executed.

Register Name	Bit							
	7	6	5	4	3	2	1	0
EEA	—	EEA6	EEA5	EEA4	EEA3	EEA2	EEA1	EEA0
EED	D7	D6	D5	D4	D3	D2	D1	D0
EEC	EWERTS	EREN	ER	MODE	WREN	WR	RDEN	RD

EEPROM Register List

- **EEA Register**

Bit	7	6	5	4	3	2	1	0
Name	—	EEA6	EEA5	EEA4	EEA3	EEA2	EEA1	EEA0
R/W	—	R/W	R/W	R/W	R/W	R/W	R/W	R/W
POR	—	0	0	0	0	0	0	0

Bit 7 Unimplemented, read as “0”

Bit 6~0 **EEA6~EEA0**: Data EEPROM address bit 6~bit 0

- **EED Register**

Bit	7	6	5	4	3	2	1	0
Name	D7	D6	D5	D4	D3	D2	D1	D0
R/W	R/W	R/W	R/W	R/W	R/W	R/W	R/W	R/W
POR	0	0	0	0	0	0	0	0

Bit 7~0 **D7~D0**: Data EEPROM data bit 7~bit 0

• **EEC Register**

Bit	7	6	5	4	3	2	1	0
Name	EWERTS	EREN	ER	MODE	WREN	WR	RDEN	RD
R/W	R/W	R/W	R/W	R/W	R/W	R/W	R/W	R/W
POR	0	0	0	0	0	0	0	0

Bit 7 **EWERTS**: EEPROM Erase time and Write time selection
0: Erase time is 3.2ms (t_{EEER})/Write time is 2.2ms (t_{EEWR})
1: Erase time is 3.7ms (t_{EEER})/Write time is 3.0ms (t_{EEWR})

Bit 6 **EREN**: Data EEPROM erase enable
0: Disable
1: Enable

This bit is used to enable data EEPROM erase function and must be set high before erase operations are carried out. This bit will be automatically reset to zero by the hardware after the erase cycle has finished. Clearing this bit to zero will inhibit data EEPROM erase operations.

Bit 5 **ER**: Data EEPROM erase control
0: Erase cycle has finished
1: Activate a erase cycle

When this bit is set high by the application program, an erase cycle will be activated. This bit will be automatically reset to zero by the hardware after the erase cycle has finished. Setting this bit high will have no effect if the EREN has not first been set high.

Bit 4 **MODE**: Data EEPROM Operation mode selection
0: Byte operation mode
1: Page operation mode

This is the EEPROM operation mode selection bit. When the bit is set high by the application program, the Page write, erase or read function will be selected. Otherwise, the byte write or read function will be selected. The EEPROM page buffer size is 16 bytes.

Bit 3 **WREN**: Data EEPROM Write Enable
0: Disable
1: Enable

This is the Data EEPROM Write Enable Bit, which must be set high before Data EEPROM write operations are carried out. Clearing this bit to zero will inhibit Data EEPROM write operations. Note that the WREN bit will automatically be cleared to zero after the write operation is finished.

Bit 2 **WR**: EEPROM Write Control
0: Write cycle has finished
1: Activate a write cycle

This is the Data EEPROM Write Control Bit and when set high by the application program will activate a write cycle. This bit will be automatically reset to zero by the hardware after the write cycle has finished. Setting this bit high will have no effect if the WREN has not first been set high.

Bit 1 **RDEN**: Data EEPROM Read Enable
0: Disable
1: Enable

This is the Data EEPROM Read Enable Bit which must be set high before Data EEPROM read operations are carried out. Clearing this bit to zero will inhibit Data EEPROM read operations.

Bit 0 **RD**: EEPROM Read Control
0: Read cycle has finished
1: Activate a read cycle

This is the Data EEPROM Read Control Bit and when set high by the application program will activate a read cycle. This bit will be automatically reset to zero by the hardware after the read cycle has finished. Setting this bit high will have no effect if the RDEN has not first been set high.

Note: 1. The EREN, ER, WREN, WR, RDEN and RD cannot be set high at the same time in one instruction.
2. Ensure that the f_{SUB} clock is stable before executing the erase or write operation.
3. Ensure that the erase or write operation is totally complete before changing the contents of the EEPROM related registers or activating the IAP function.

Read Operation from the EEPROM

Reading data from the EEPROM can be implemented by two modes for this device, byte read mode or page read mode, which is controlled by the EEPROM operation mode selection bit, MODE, in the EEC register.

Byte Read Mode

The EEPROM byte read operation can be executed when the mode selection bit, MODE, is cleared to zero. For a byte read operation the desired EEPROM address should first be placed in the EEA registers, as well as the read enable bit, RDEN, in the EEC register should be set high to enable the read function. Then setting the RD bit high will initiate the EEPROM byte read operation. Note that setting the RD bit high only will not initiate a read operation if the RDEN bit is not set high. When the read cycle terminates, the RD bit will automatically be cleared to zero and the EEPROM data can be read from the EED register. The data will remain in the EED register until another read or write operation is executed. The application program can poll the RD bit to determine when the data is valid for reading.

Page Read Mode

The EEPROM page read operation can be executed when the mode selection bit, MODE, is set high. The page size can be up to 16 bytes for the page read operation. For a page read operation the start address of the desired EEPROM page must first be placed in the EEA register, as well as the read enable bit, RDEN, in the EEC register should be set high to enable the read function. Then setting the RD bit high will initiate the EEPROM page read operation. Note that setting the RD bit high only will not initiate a read operation if the RDEN bit is not set high. When the current byte read cycle terminates, the RD bit will automatically be cleared indicating that the EEPROM data can be read from the EED register, and the current address will be incremented by one by hardware. The data which is stored in the next EEPROM address can continuously be read from the EED register when the RD bit is again set high without reconfiguring the EEPROM address and RDEN control bit. The application program can poll the RD bit to determine when the data is valid for reading.

The EEPROM address higher 3 bits are used to specify the desired page location while the lower 4 bits are used to point to the actual address. In the page operation mode the lower 4-bit address value will automatically be incremented by one. However, the higher 3-bit address value will not be incremented by hardware. When the EEPROM address lower 4-bit value which is internally incremented by one in the page mode reaches the page boundary, known as 0FH, the EEPROM address lower 4-bit value will stop at 0FH. The EEPROM address will not “roll over”.

Page Erase Operation to the EEPROM

The EEPROM page erase operation can be executed when the mode selection bit, MODE, is set high. The EEPROM is capable of a 16-byte page erase. The internal page buffer will be cleared by hardware after power on reset. When the EEPROM erase enable control bit, namely EREN, is changed from “1” to “0”, the internal page buffer will also be cleared. Note that when the EREN bit is changed from “0” to “1”, the internal page buffer will not be cleared. The EEPROM address lower

4 bits are internally incremented by one following the reception of each dummy data byte in the page erase mode. The EEPROM address higher 3 bits used to specify the desired page location will not be incremented. When the EEPROM address, internally generated, reaches the page boundary, namely 0FH, the EEPROM address will stop at 0FH. The EEPROM address will not "roll over".

For page erase operations the start address of the desired EEPROM page should first be placed in the EEA registers, then the dummy data to be written is placed in the EED registers. The maximum data length for a page is 16 bytes. Note that the write operation to the EED register is used to tag address, it must be implemented to determine which addresses to be erased. When the page dummy data is completely written then the EREN bit in the EEC register should first be set high to enable erase operations and the ER bit must be immediately set high to initiate the EEPROM erase process. These two instructions must be executed in two consecutive instruction cycles. The global interrupt enable bit EMI should also first be cleared before implementing an erase operation and then set again after a valid erase activation procedure has completed.

Note: The above steps must be executed sequentially to successfully complete the page erase operation, refer to the corresponding programming example.

As the EEPROM erase cycle is controlled using an internal timer whose operation is asynchronous to microcontroller system clock, a certain time will elapse before the data will have been erased from the EEPROM. Detecting when the erase cycle has finished can be implemented either by polling the ER bit in the EEC register or by using the EEPROM interrupt. When the erase cycle terminates, the ER bit will be automatically cleared to zero by the microcontroller, informing the user that the page data has been erased. The application program can therefore poll the ER bit to determine when the erase cycle has ended. After the erase operation is finished, the EREN bit will be set low by hardware. The Data EEPROM erased page content will be 0000H after a page erase operation.

Write Operation to the EEPROM

Writing data to the EEPROM can be implemented by two modes for this device, byte write mode or page write mode, which is controlled by the EEPROM operation mode selection bit, MODE, in the EEC register.

Byte Write Mode

The EEPROM byte write operation can be executed when the mode selection bit, MODE, is cleared to zero. For byte-write operations the required EEPROM address must first be placed in the EEA register, then the data placed in the EED register. To initiate a write cycle, the write enable bit, WREN, in the EEC register must first be set high to enable the write function. After this, the WR bit in the EEC register must be immediately set high to initiate a write cycle. These two instructions must be executed in two consecutive instruction cycles. The global interrupt bit EMI should also first be cleared before implementing any write operations, and then set high again after a valid write activation procedure has completed. Note that setting the WR bit high will not initiate a write cycle if the WREN bit has not been set.

Note: The above steps must be executed sequentially to successfully complete the byte write operation, refer to the corresponding programming example.

As the EEPROM write cycle is controlled using an internal timer whose operation is asynchronous to microcontroller system clock, a certain time will elapse before the data will have been written into the EEPROM. Detecting when the write cycle has finished can be implemented either by polling the WR bit in the EEC register or by using the EEPROM interrupt. When the write cycle terminates, the WR bit will be automatically cleared to zero by the microcontroller, informing the user that the data has been written to the EEPROM. The application program can therefore poll the WR bit to determine when the write cycle has ended. Note that a byte erase operation will automatically be executed before a byte write operation is successfully activated.

Page Write Mode

Before a page write operation is executed, it is important to ensure that a relevant page erase operation has been successfully executed. The EEPROM page write operation can be executed when the mode selection bit, MODE, is set high. The EEPROM is capable of a 16-byte page write. The internal page buffer will be cleared by hardware after power on reset. When the EEPROM write enable control bit, namely WREN, is changed from "1" to "0", the internal page buffer will also be cleared. Note that when the WREN bit is changed from "0" to "1", the internal page buffer will not be cleared. A page write is initiated in the same way as a byte write initiation except that the EEPROM data can be written up to 16 bytes. The EEPROM address lower 4 bits are internally incremented by one following the reception of each data byte in the page write mode. The EEPROM address higher 3 bits used to specify the desired page location will not be incremented. When the word address, internally generated, reaches the page boundary, namely 0FH, the EEPROM address will stop at 0FH. The EEPROM address will not "roll over". At this point any data write operations to the EED register will be invalid.

For page-write operations the the start address of the desired EEPROM page must first be placed in the EEA register, then the data placed in the EED register. The maximum data length for a page is 16 bytes. Note that when a data byte is written into the EED register, then the data in the EED register will be loaded into the internal page buffer and the current address value will automatically be incremented by one. When the page data is completely written into the page buffer, then the write enable bit, WREN, in the EEC register must first be set high to enable the write function. After this, the WR bit in the EEC register must be immediately set high to initiate a write cycle. These two instructions must be executed in two consecutive instruction cycles. The global interrupt bit EMI should also first be cleared before implementing any write operations, and then set again after a valid write activation procedure has completed. Note that setting the WR bit high will not initiate a write cycle if the WREN bit has not been set.

Note: The above steps must be executed sequentially to successfully complete the page write operation, refer to the corresponding programming example.

As the EEPROM write cycle is controlled using an internal timer whose operation is asynchronous to microcontroller system clock, a certain time will elapse before the data will have been written into the EEPROM. Detecting when the write cycle has finished can be implemented either by polling the WR bit in the EEC register or by using the EEPROM interrupt. When the write cycle terminates, the WR bit will be automatically cleared to zero by the microcontroller, informing the user that the data has been written to the EEPROM. The application program can therefore poll the WR bit to determine when the write cycle has ended. After the write operation is finished, the WREN bit will be set low by hardware.

Write Protection

Protection against inadvertent write operation is provided in several ways. After the device is powered-on the Write Enable bit in the control register will be cleared preventing any write operations. Also at power-on the Memory Pointer high byte register, MP1H or MP2H, will be reset to zero, which means that Data Memory Sector 0 will be selected. As the EEPROM control register is located in Sector 1, this adds a further measure of protection against spurious write operations. During normal program operation, ensuring that the Write Enable bit in the control register is cleared will safeguard against incorrect write operations.

EEPROM Interrupt

The EEPROM interrupt is generated when an EEPROM erase or write cycle has ended. The EEPROM interrupt must first be enabled by setting the DEE bit in the relevant interrupt register. However, as the EEPROM interrupt is contained within a Multi-function interrupt, the associated multi-function interrupt enable bit must also be set. When an EEPROM erase or write cycle ends, the DEF request flag and its associated multi-function interrupt request flag will both be set high. If the global, EEPROM and multi-function interrupts are enabled and the stack is not full, a jump to the associated Multi-function interrupt vector will take place. When the interrupt is serviced only the Multi-function interrupt flag will be automatically reset, the EEPROM interrupt flag must be manually reset by the application program. The EMI bit will also be automatically cleared to disable other interrupts. More details can be obtained in the Interrupts section.

Programming Considerations

Care must be taken that data is not inadvertently written to the EEPROM. Protection can be enhanced by ensuring that the Write Enable bit is normally cleared to zero when not writing. Also the Memory Pointer high byte register, MP1H or MP2H, could be normally cleared to zero as this would inhibit access to Sector 1 where the EEPROM control register exists. Although certainly not necessary, consideration might be given in the application program to the checking of the validity of new write data by a simple read back process.

When writing data the WR bit must be set high immediately after the WREN bit has been set high, to ensure the write cycle executes correctly. When erasing data the ER bit must be set high immediately after the EREN bit has been set high, to ensure the erase cycle executes correctly. The global interrupt bit EMI should also be cleared before a write or erase cycle is executed and then set again after a valid write or erase activation procedure has completed. Note that the device should not enter the IDLE or SLEEP mode until the EEPROM read, erase or write operation is totally complete. Otherwise, the EEPROM read, erase or write operation will fail.

Programming Examples

Reading a Data Byte from the EEPROM – polling method

```
MOV  A, 040H              ; setup memory pointer low byte MP1L
MOV  MP1L, A              ; MP1 points to EEC register
MOV  A, 01H               ; setup memory pointer high byte MP1H
MOV  MP1H, A
CLR  IAR1.4               ; clear MODE bit, select byte operation mode
MOV  A, EEPROM_ADRES      ; user defined address
MOV  EEA, A
SET  IAR1.1               ; set RDEN bit, enable read operations
SET  IAR1.0               ; start Read Cycle - set RD bit
BACK:
SZ   IAR1.0               ; check for read cycle end
JMP  BACK
CLR  IAR1                 ; disable EEPROM read function
CLR  MP1H
MOV  A, EED               ; move read data to register
MOV  READ_DATA, A
```

Reading a Data Page from the EEPROM – polling method

```
MOV  A, 040H              ; setup memory pointer low byte MP1L
MOV  MP1L, A              ; MP1 points to EEC register
MOV  A, 01H               ; setup memory pointer high byte MP1H
MOV  MP1H, A
SET  IAR1.4               ; set MODE bit, select page operation mode
MOV  A, EEPROM_ADRES      ; user defined address
MOV  EEA, A
SET  IAR1.1               ; set RDEN bit, enable read operations
; ~~~~ The data length can be up to 16 bytes (Start) ~~~~
CALL READ
CALL READ
:
:
JMP  PAGE_READ_FINISH
; ~~~~ The data length can be up to 16 bytes (End) ~~~~
READ:
SET  IAR1.0               ; start Read Cycle - set RD bit
BACK:
SZ   IAR1.0               ; check for read cycle end
JMP  BACK
MOV  A, EED               ; move read data to register
MOV  READ_DATA, A
RET
:
PAGE_READ_FINISH:
CLR  IAR1                 ; disable EEPROM read function
CLR  MP1H
```

Erasing a Data Page to the EEPROM − polling method

```
MOV  A, 040H              ; setup memory pointer low byte MP1L
MOV  MP1L, A              ; MP1L points to EEC register
MOV  A, 01H               ; setup memory pointer high byte MP1H
MOV  MP1H, A
SET  IAR1.4               ; set MODE bit, select page operation mode
MOV  A, EEPROM_ADRES      ; user defined address
MOV  EEA, A
; ~~~~ The data length can be up to 16 bytes (Start) ~~~~
CALL WRITE_BUF
CALL WRITE_BUF
:
:
JMP  Erase_START
; ~~~~ The data length can be up to 16 bytes (End) ~~~~
WRITE_BUF:
MOV  A, EEPROM_DATA       ; user defined data, erase mode don’t care data value
MOV  EED, A
RET
:
Erase_START:
CLR  EMI
SET  IAR1.6               ; set EREN bit, enable erase operations
SET  IAR1.5               ; start Erase Cycle - set ER bit
SET  EMI
BACK:
SZ   IAR1.5               ; check for erase cycle end
JMP  BACK
CLR  MP1H
```

Writing a Data Byte to the EEPROM – polling method

```
MOV  A, 040H              ; setup Memory Pointer MP1L
MOV  MP1L, A              ; MP1L points to EEC register
MOV  A, 01H               ; setup Memory Pointer MP1H
MOV  MP1H, A
CLR  IAR1.4               ; clear MODE bit, select byte write mode
MOV  A, EEPROM_ADRES      ; user defined address
MOV  EEA, A
MOV  A, EEPROM_DATA       ; user defined data
MOV  EED, A
CLR  EMI
SET  IAR1.3               ; set WREN bit, enable write operations
SET  IAR1.2               ; start Write Cycle - set WR bit
SET  EMI
BACK:
SZ   IAR1.2               ; check for write cycle end
JMP  BACK
CLR  MP1H
```

Writing a Data Page to the EEPROM – polling method

```
MOV  A, 040H              ; setup memory pointer low byte MP1L
MOV  MP1L, A              ; MP1 points to EEC register
MOV  A, 01H               ; setup memory pointer high byte MP1H
MOV  MP1H, A
SET  IAR1.4               ; set MODE bit, select page operation mode
MOV  A, EEPROM_ADRES      ; user defined address
MOV  EEA, A
; ~~~~ The data length can be up to 16 bytes (Start) ~~~~
CALL WRITE_BUF
CALL WRITE_BUF
:
:
JMP  WRITE_START
; ~~~~ The data length can be up to 16 bytes (End) ~~~~
WRITE_BUF:
MOV  A, EEPROM_DATA       ; user defined data
MOV  EED, A
RET
:
WRITE_START:
CLR  EMI
SET  IAR1.3               ; set WREN bit, enable write operations
SET  IAR1.2               ; start Write Cycle - set WR bit - executed immediately
                          ; after setting WREN bit
SET  EMI
BACK:
SZ   IAR1.2               ; check for write cycle end
JMP  BACK
CLR  MP1H
```

Oscillators

Various oscillator options offer the user a wide range of functions according to their various application requirements. The flexible features of the oscillator functions ensure that the best optimisation can be achieved in terms of speed and power saving. Oscillator selections and operation are selected through a combination of configuration option and relevant control registers.

Oscillator Overview

In addition to being the source of the main system clock the oscillators also provide clock sources for the Watchdog Timer and Time Base Interrupts. Fully integrated internal oscillators, requiring no external components, are provided to form a range of both fast and slow system oscillators. The higher frequency oscillator provides higher performance but carry with it the disadvantage of higher power requirements, while the opposite is of course true for the lower frequency oscillator. With the capability of dynamically switching between fast and slow system clock, the device has the flexibility to optimize the performance/power ratio, a feature especially important in power sensitive portable applications.

Type	Name	Frequency
Internal High Speed RC Oscillator	HIRC	8/12/16MHz
Internal Low Speed RC Oscillator	LIRC	32kHz

Oscillator Types

System Clock Configurations

There are two methods of generating the system clock, a high speed oscillator and a low speed oscillator. The high speed oscillator is the internal 8/12/16MHz RC oscillator, HIRC. The low speed oscillator is the internal 32kHz RC oscillator, LIRC. Selecting whether the low or high speed oscillator is used as the system oscillator is implemented using the CKS2~CKS0 bits in the SCC register and the system clock can be dynamically selected.

The actual source clock used for the low speed oscillators is chosen via the FSS bit in the SCC register while for the high speed oscillator the source clock is selected by the FHS bit in the SCC register. The frequency of the slow speed or high speed system clock is also determined using the CKS2~CKS0 bits in the SCC register. Note that two oscillator selections must be made namely one high speed and one low speed system oscillators. It is not possible to choose a no-oscillator selection for either the high or low speed oscillator.

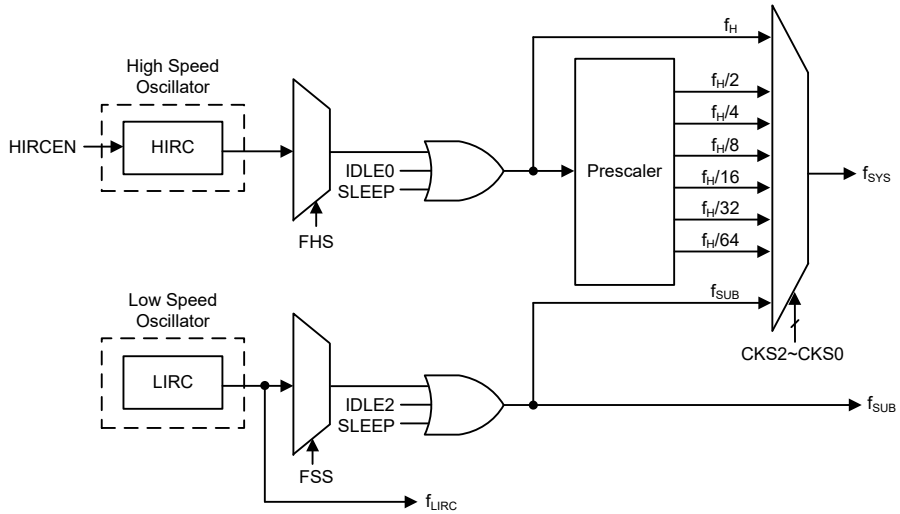

System Clock Configurations

Internal High Speed Internal RC Oscillator – HIRC

The internal RC oscillator is one of the high frequency oscillator choices, which is selected via a software control bit, FHS. It is a fully integrated system oscillator requiring no external components. The internal RC oscillator has three fixed frequencies of 8MHz, 12MHz and 16MHz, which is selected using a configuration option. The HIRC1~HIRC0 bits in the HIRCC register must also be setup to match the selected configuration option frequency. Setting up these bits is necessary to ensure that the HIRC frequency accuracy specified in the A.C. Characterisitcs is achieved. Device trimming during the manufacturing process and the inclusion of internal frequency compensation circuits are used to ensure that the influence of the power supply voltage, temperature and process variations on the oscillation frequency are minimised. Note that if this internal system clock is selected, as it requires no external pins for its operation, I/O pins are free for use as normal I/O pins or other pin-shared functional pins.

Internal 32kHz Oscillator – LIRC

The Internal 32kHz Oscillator is one of the low frequency oscillator choices, which is selected by the FSS bit in the SCC register. It is a fully integrated RC oscillator with a typical frequency of 32kHz, requiring no external components for its implementation. Device trimming during the manufacturing process and the inclusion of internal frequency compensation circuits are used to ensure that the influence of the power supply voltage, temperature and process variations on the oscillation frequency are minimised.

Operating Modes and System Clocks

Present day applications require that their microcontrollers have high performance but often still demand that they consume as little power as possible, conflicting requirements that are especially true in battery powered portable applications. The fast clocks required for high performance will by their nature increase current consumption and of course vice-versa, lower speed clocks reduce current consumption. As Holtek has provided this device with both high and low speed clock sources and the means to switch between them dynamically, the user can optimise the operation of their microcontroller to achieve the best performance/power ratio.

System Clocks

This device has many different clock sources for both the CPU and peripheral function operation. By providing the user with a wide range of clock selections using register programming, a clock system can be configured to obtain maximum application performance.

The main system clock, can come from either a high frequency, f_H, or low frequency, f_{SUB}, source, and is selected using the CKS2~CKS0 bits in the SCC register. The high speed system clock can be sourced from HIRC oscillator, selected via configuring the FHS bit in the SCC register. The low speed system clock source can be sourced from internal clock f_{SUB}. If f_{SUB} is selected then it can be sourced by LIRC oscillator, selected via configuring the FSS bit in the SCC register. The other choice, which is a divided version of the high speed system oscillator has a range of $f_H/2$~$f_H/64$.

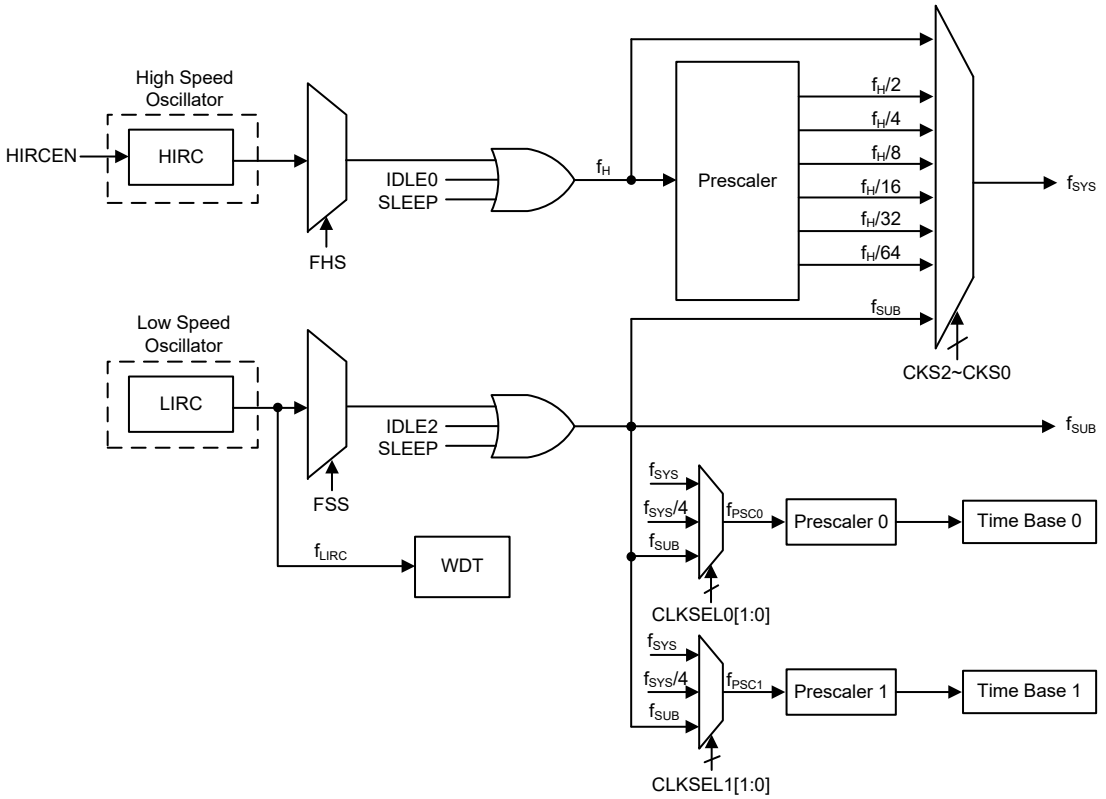

Device Clock Configurations

Note: When the system clock source f_{SYS} is switched to f_{SUB} from f_H, the high speed oscillator will stop to conserve the power or continue to oscillate to provide the clock source, f_H~f_H/64, for peripheral circuit to use, which is determined by configuring the corresponding high speed oscillator enable control bit.

System Operation Modes

There are six different modes of operation for the microcontroller, each one with its own special characteristics and which can be chosen according to the specific performance and power requirements of the application. There are two modes allowing normal operation of the microcontroller, the FAST Mode and SLOW Mode. The remaining four modes, the SLEEP, IDLE0, IDLE1 and IDLE2 Mode, are used when the microcontroller CPU is switched off to conserve power.

Operation Mode	CPU	Register Setting			f_{SYS}	f_H	f_{SUB}	f_{LIRC}
		FHIDEN	FSIDEN	CKS2~CKS0				
FAST	On	x	x	000~110	f_H~f_H/64	On	On	On
SLOW	On	x	x	111	f_{SUB}	On/Off (1)	On	On
IDLE0	Off	0	1	000~110	Off	Off	On	On
				111	On			
IDLE1	Off	1	1	xxx	On	On	On	On
IDLE2	Off	1	0	000~110	On	On	Off	On
				111	Off			
SLEEP	Off	0	0	xxx	Off	Off	Off	On/Off (2)

"x": Don't care

Note: 1. The f_H clock will be switched on or off by configuring the corresponding oscillator enable bit in the SLOW mode.
2. The f_{LIRC} clock can be switched on or off which is controlled by the WDT function being enabled or disabled in the SLEEP mode.

FAST Mode

This is one of the main operating modes where the microcontroller has all of its functions operational and where the system clock is provided by one of the high speed oscillators. This mode operates allowing the microcontroller to operate normally with a clock source will come from one of the high speed oscillator, HIRC oscillator, selected by the FHS bit in the SCC register. The high speed oscillator will however first be divided by a ratio ranging from 1 to 64, the actual ratio being selected by the CKS2~CKS0 bit in the SCC register. Although a high speed oscillator is used, running the microcontroller at a divided clock ratio reduces the operating current.

SLOW Mode

This is also a mode where the microcontroller operates normally although now with a slower speed clock source. The clock source used will be from f_{SUB}. The f_{SUB} clock is derived from the LIRC oscillator determined by the FSS bit in the SCC register.

SLEEP Mode

The SLEEP Mode is entered when a HALT instruction is executed and when the FHIDEN and FSIDEN bit are low. In the SLEEP mode the CPU will be stopped. The f_{SUB} clock provided to the peripheral function will also be stopped, too. However the f_{LIRC} clock can continue to operate if the WDT function is enabled by the WDTC register.

IDLE0 Mode

The IDLE0 Mode is entered when a HALT instruction is executed and when the FHIDEN bit in the SCC register is low and the FSIDEN bit in the SCC register is high. In the IDLE0 Mode the CPU will be switched off but the low speed oscillator will be turned on to drive some peripheral functions.

IDLE1 Mode

The IDLE1 Mode is entered when a HALT instruction is executed and when the FHIDEN bit in the SCC register is high and the FSIDEN bit in the SCC register is high. In the IDLE1 Mode the CPU will be switched off but both the high and low speed oscillators will be turned on to provide a clock source to keep some peripheral functions operational.

IDLE2 Mode

The IDLE2 Mode is entered when a HALT instruction is executed and when the FHIDEN bit in the SCC register is high and the FSIDEN bit in the SCC register is low. In the IDLE2 Mode the CPU and low speed oscillator will be switched off but the high speed oscillator will be turned on to provide a clock source to keep some peripheral functions operational.

Control Registers

The registers, SCC and HIRCC are used to control the system clock and the corresponding oscillator configurations.

Register Name	Bit							
	7	6	5	4	3	2	1	0
SCC	CKS2	CKS1	CKS0	—	FHS	FSS	FHIDEN	FSIDEN
HIRCC	—	—	—	—	HIRC1	HIRC0	HIRCF	HIRCEN

System Operating Mode Control Register List

• **SCC Register**

Bit	7	6	5	4	3	2	1	0
Name	CKS2	CKS1	CKS0	—	FHS	FSS	FHIDEN	FSIDEN
R/W	R/W	R/W	R/W	—	R/W	R/W	R/W	R/W
POR	0	0	0	—	0	0	0	0

Bit 7~5 **CKS2~CKS0**: System clock selection
000: f_H
001: $f_H/2$
010: $f_H/4$
011: $f_H/8$
100: $f_H/16$
101: $f_H/32$
110: $f_H/64$
111: f_{SUB}
These three bits are used to select which clock is used as the system clock source. In addition to the system clock source directly derived from f_H or f_{SUB}, a divided version of the high speed system oscillator can also be chosen as the system clock source.

Bit 4 Unimplemented, read as "0"

Bit 3 **FHS**: High Frequency clock selection
0: HIRC
1: Reserved
This bit should be kept as "0".

Bit 2 **FSS**: Low Frequency clock selection
0: LIRC
1: Reserved
This bit should be kept as "0".

Bit 1 **FHIDEN**: High Frequency oscillator control when CPU is switched off
0: Disable
1: Enable
This bit is used to control whether the high speed oscillator is activated or stopped when the CPU is switched off by executing an "HALT" instruction.

Bit 0 **FSIDEN**: Low Frequency oscillator control when CPU is switched off
0: Disable
1: Enable
This bit is used to control whether the low speed oscillator is activated or stopped when the CPU is switched off by executing an "HALT" instruction.

Note: 1. A certain delay is required before the relevant clock is successfully switched to the target clock source after any clock switching setup using the CKS2~CKS0 bits, FHS bit or FSS bit. A proper delay time must be arranged before executing the following operations which require immediate reaction with the target clock source.
2. Clock switching delay time = $4\times t_{SYS}$ + $[0\sim(1.5\times t_{Curr}+0.5\times t_{Tar})]$, Where t_{Curr} indicates the current clock period, t_{Tar} indicates the target clock period and the t_{SYS} indicates the current system clock period.

• **HIRCC Register**

Bit	7	6	5	4	3	2	1	0
Name	—	—	—	—	HIRC1	HIRC0	HIRCF	HIRCEN
R/W	—	—	—	—	R/W	R/W	R	R/W
POR	—	—	—	—	0	0	0	1

Bit 7~4 Unimplemented, read as "0"

Bit 3~2 **HIRC1~HIRC0**: HIRC frequency selection
00: 8MHz
01: 12MHz
10: 16MHz
11: 8MHz

When the HIRC oscillator is enabled or the HIRC frequency selection is changed by application program, the clock frequency will automatically be changed after the HIRCF flag is set high.

It is recommended that the HIRC frequency selected by these two bits should be same with the frequency determined by the configuration option to achieve the HIRC frequency accuracy specified in the A.C. Characteristics.

Bit 1 **HIRCF**: HIRC oscillator stable flag
0: HIRC unstable
1: HIRC stable

This bit is used to indicate whether the HIRC oscillator is stable or not. When the HIRCEN bit is set high to enable the HIRC oscillator, the HIRCF bit will first be cleared to zero and then set high after the HIRC oscillator is stable.

Bit 0 **HIRCEN**: HIRC oscillator enable control
0: Disable
1: Enable

Operating Mode Switching

This device can switch between operating modes dynamically allowing the user to select the best performance/power ratio for the present task in hand. In this way microcontroller operations that do not require high performance can be executed using slower clocks thus requiring less operating current and prolonging battery life in portable applications.

In simple terms, mode switching between the FAST Mode and SLOW Mode is executed using the CKS2~CKS0 bits in the SCC register while mode switching from the FAST/SLOW Modes to the SLEEP/IDLE Modes is executed via the HALT instruction. When a HALT instruction is executed, whether the device enters the IDLE Mode or the SLEEP Mode is determined by the condition of the FHIDEN and FSIDEN bits in the SCC register.

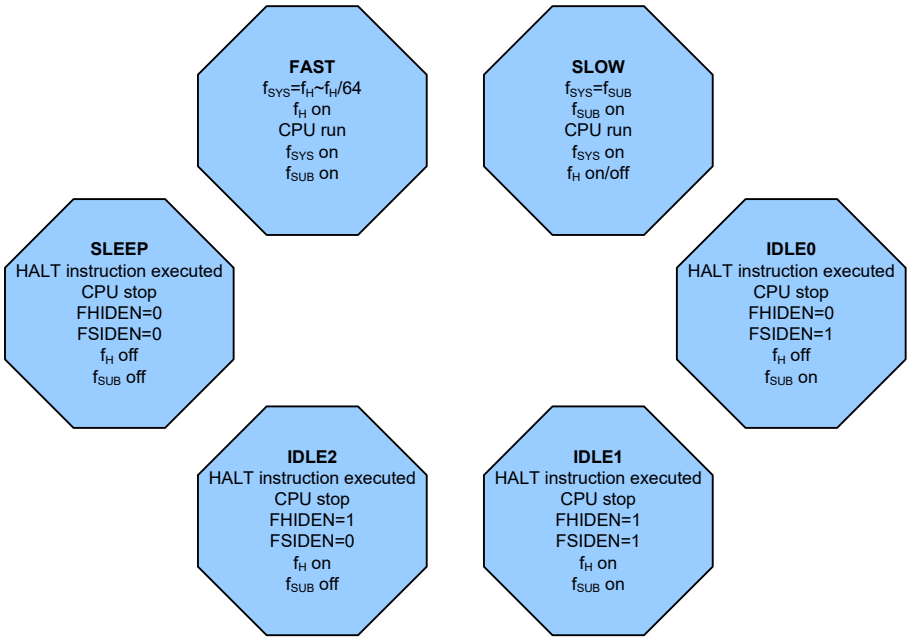

FAST Mode to SLOW Mode Switching

When running in the FAST Mode, which uses the high speed system oscillator, and therefore consumes more power, the system clock can switch to run in the SLOW Mode by setting the CKS2~CKS0 bits to "111" in the SCC register. This will then use the low speed system oscillator which will consume less power. Users may decide to do this for certain operations which do not require high performance and can subsequently reduce power consumption.

The SLOW Mode system clock is sourced from the LIRC oscillator determined by the FSS bit in the SCC register and therefore requires this oscillator to be stable before full mode switching occurs.

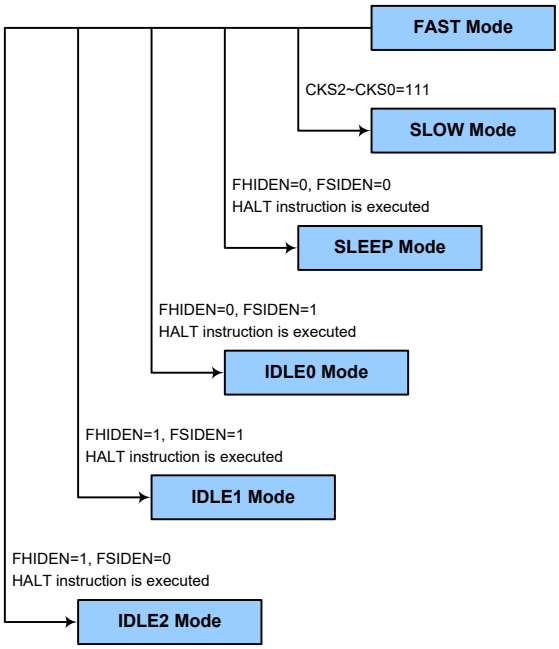

SLOW Mode to FAST Mode Switching

In the SLOW mode the system clock is derived from f_{SUB}. When system clock is switched back to the FAST mode from f_{SUB}, the CKS2~CKS0 bits should be set to "000"~"110" and then the system clock will respectively be switched to f_H~f_H/64.

However, if f_H is not used in the SLOW mode and thus switched off, it will take some time to re-oscillate and stabilise when switching to the FAST mode from the SLOW Mode. This is monitored using the HIRCF bit in the HIRCC register. The time duration required for the high speed system oscillator stabilization is specified in the System Start Up Time Characteristics.

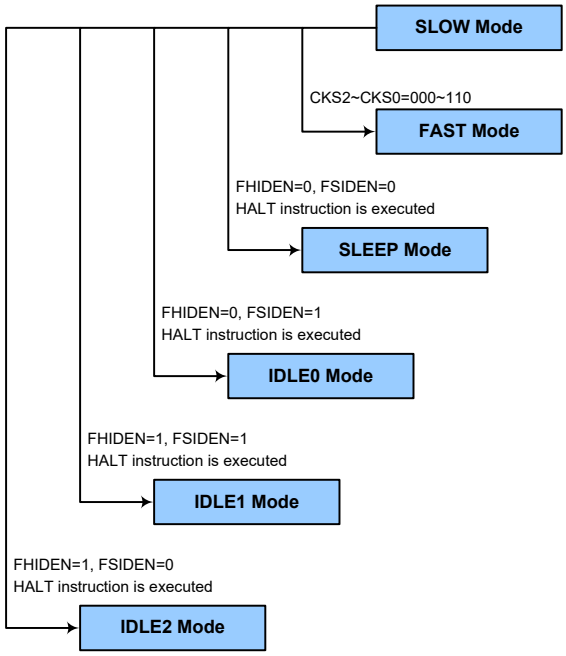

Entering the SLEEP Mode

There is only one way for the device to enter the SLEEP Mode and that is to execute the "HALT" instruction in the application program with both the FHIDEN and FSIDEN bits in the SCC register equal to "0". In this mode all the clocks and functions will be switched off except the WDT function. When this instruction is executed under the conditions described above, the following will occur:

- The system clock will be stopped and the application program will stop at the "HALT" instruction.
- The Data Memory contents and registers will maintain their present condition.
- The I/O ports will maintain their present conditions.
- In the status register, the Power Down flag PDF will be set, and WDT timeout flag TO will be cleared.
- The WDT will be cleared and resume counting if the WDT function is enabled. If the WDT function is disabled, the WDT will be cleared and then stopped.

Entering the IDLE0 Mode

There is only one way for the device to enter the IDLE0 Mode and that is to execute the "HALT" instruction in the application program with the FHIDEN bit in the SCC register equal to "0" and the FSIDEN bit in the SCC register equal to "1". When this instruction is executed under the conditions described above, the following will occur:

- The f_H clock will be stopped and the application program will stop at the "HALT" instruction, but the f_{SUB} clock will be on.
- The Data Memory contents and registers will maintain their present condition.
- The I/O ports will maintain their present conditions.
- In the status register, the Power Down flag PDF will be set, and WDT timeout flag TO will be cleared.
- The WDT will be cleared and resume counting if the WDT function is enabled. If the WDT function is disabled, the WDT will be cleared and then stopped.

Entering the IDLE1 Mode

There is only one way for the device to enter the IDLE1 Mode and that is to execute the "HALT" instruction in the application program with both the FHIDEN and FSIDEN bits in the SCC register equal to "1". When this instruction is executed under the conditions described above, the following will occur:

- The f_H and f_{SUB} clocks will be on but the application program will stop at the "HALT" instruction.
- The Data Memory contents and registers will maintain their present condition.
- The I/O ports will maintain their present conditions.
- In the status register, the Power Down flag PDF will be set, and WDT timeout flag TO will be cleared.
- The WDT will be cleared and resume counting if the WDT function is enabled. If the WDT function is disabled, the WDT will be cleared and then stopped.

Entering the IDLE2 Mode

There is only one way for the device to enter the IDLE2 Mode and that is to execute the "HALT" instruction in the application program with the FHIDEN bit in the SCC register equal to "1" and the FSIDEN bit in the SCC register equal to "0". When this instruction is executed under the conditions described above, the following will occur:

- The f_H clock will be on but the f_{SUB} clock will be off and the application program will stop at the "HALT" instruction.
- The Data Memory contents and registers will maintain their present condition.
- The I/O ports will maintain their present conditions.
- In the status register, the Power Down flag, PDF, will be set and the Watchdog time-out flag, TO, will be cleared.
- The WDT will be cleared and resume counting if the WDT function is enabled. If the WDT function is disabled, the WDT will be cleared and then stopped.

Standby Current Considerations

As the main reason for entering the SLEEP or IDLE Mode is to keep the current consumption of the device to as low a value as possible, perhaps only in the order of several micro-amps except in the IDLE1 and IDLE2 Mode, there are other considerations which must also be taken into account by the circuit designer if the power consumption is to be minimised. Special attention must be made to the I/O pins on the device. All high-impedance input pins must be connected to either a fixed high or low level as any floating input pins could create internal oscillations and result in increased current consumption. This also applies to the device which has different package types, as there may be unbonded pins. These pins must either be set as outputs or if set as inputs must have pull-high resistors connected.

Care must also be taken with the loads, which are connected to I/O pins, which are set as outputs. These should be placed in a condition in which minimum current is drawn or connected only to external circuits that do not draw current, such as other CMOS inputs. Also note that additional standby current will also be required if the LIRC oscillator has enabled via configuration option.

In the IDLE1 and IDLE2 Mode the system oscillator is on, if the peripheral function clock source is derived from the high speed oscillator, the additional standby current will also be perhaps in the order of several hundred micro-amps.

Wake-up

To minimise power consumption the device can enter the SLEEP or any IDLE Mode, where the CPU will be switched off. However, when the device is woken up again, it will take a considerable time for the original system oscillator to restart, stablise and allow normal operation to resume.

After the system enters the SLEEP or IDLE Mode, it can be woken up from one of various sources listed as follows:

- An external falling edge on Port A
- An external $\overline{\text{RES}}$ pin reset
- A system interrupt
- A WDT overflow

If the system is woken up by an external $\overline{\text{RES}}$ pin reset, the device will experience a full system reset, however, if the device is woken up by a WDT overflow, a Watchdog Timer reset will be initiated. Although both of these wake-up methods will initiate a reset operation, the actual source of the wake-up can be determined by examining the TO and PDF flag. The PDF flag is cleared by a system power-up or executing the clear Watchdog Timer instructions and is set when executing the "HALT" instruction. The TO flag is set if a WDT time-out occurs and causes a wake-up that only resets the Program Counter and Stack Pointer, other flags remain in their original status.

Each pin on Port A can be set using the PAWU register to permit a negative transition on the pin to wake up the system. When a Port A pin wake-up occurs, the program will resume execution at the instruction following the "HALT" instruction. If the system is woken up by an interrupt, then two possible situations may occur. The first is where the related interrupt is disabled or the interrupt is enabled but the stack is full, in which case the program will resume execution at the instruction following the "HALT" instruction. In this situation, the interrupt which woke up the device will not be immediately serviced, but will rather be serviced later when the related interrupt is finally enabled or when a stack level becomes free. The other situation is where the related interrupt is enabled and the stack is not full, in which case the regular interrupt response takes place. If an interrupt request flag is set high before entering the SLEEP or IDLE Mode, the wake-up function of the related interrupt will be disabled.

Programming Considerations

There are peripheral functions, such as TMs, for which the f_{SYS} is used. If the system clock source is switched from f_H to f_{SUB}, the clock source to the peripheral functions mentioned above will change accordingly.

Watchdog Timer

The Watchdog Timer is provided to prevent program malfunctions or sequences from jumping to unknown locations, due to certain uncontrollable external events such as electrical noise.

Watchdog Timer Clock Source

The Watchdog Timer clock source is provided by the internal clock, f_{LIRC} which is sourced from the LIRC oscillator. The LIRC internal oscillator has an approximate frequency of 32kHz and this specified internal clock period can vary with V_{DD}, temperature and process variations. The Watchdog Timer source clock is then subdivided by a ratio of 2^8 to 2^{18} to give longer timeouts, the actual value being chosen using the WS2~WS0 bits in the WDTC register.

Watchdog Timer Control Register

A single register, WDTC, controls the required timeout period as well as the enable/disable and reset MCU operation.

- **WDTC Register**

Bit	7	6	5	4	3	2	1	0
Name	WE4	WE3	WE2	WE1	WE0	WS2	WS1	WS0
R/W	R/W	R/W	R/W	R/W	R/W	R/W	R/W	R/W
POR	0	1	0	1	0	0	1	1

Bit 7~3 **WE4~WE0**: WDT function software control
10101: Disable
01010: Enable
Other values: Reset MCU
When these bits are changed to any other values due to environmental noise the microcontroller will be reset; this reset operation will be activated after a delay time, t_{SRESET}, and the WRF bit in the CTRL register will be set high.

Bit 2~0 **WS2~WS0**: WDT time-out period selection
000: $2^8/f_{LIRC}$
001: $2^{10}/f_{LIRC}$
010: $2^{12}/f_{LIRC}$
011: $2^{14}/f_{LIRC}$
100: $2^{15}/f_{LIRC}$
101: $2^{16}/f_{LIRC}$
110: $2^{17}/f_{LIRC}$
111: $2^{18}/f_{LIRC}$
These three bits determine the division ratio of the Watchdog Timer source clock, which in turn determines the timeout period.

- **RSTFC Register**

Bit	7	6	5	4	3	2	1	0
Name	—	—	—	—	RSTF	LVRF	LRF	WRF
R/W	—	—	—	—	R/W	R/W	R/W	R/W
POR	—	—	—	—	0	x	0	0

"x": unknown

Bit 7~4 Unimplemented, read as "0"

Bit 3 **RSTF**: Reset control register software reset flag
Described elsewhere.

Bit 2 **LVRF**: LVR function reset flag
Refer to the Low Voltage Reset section.

Bit 1 **LRF**: LVR control register software reset flag
Refer to the Low Voltage Reset section.

Bit 0 **WRF**: WDT control register software reset flag
0: Not occurred
1: Occurred
This bit is set high by the WDT Control register software reset and cleared to zero by the application program. Note that this bit can only be cleared to zero by the application program.

Watchdog Timer Operation

The Watchdog Timer operates by providing a device reset when its timer overflows. This means that in the application program and during normal operation the user has to strategically clear the Watchdog Timer before it overflows to prevent the Watchdog Timer from executing a reset. This is done using the clear watchdog instruction. If the program malfunctions for whatever reason, jumps to an unknown location, or enters an endless loop, the clear instruction will not be executed in the correct manner, in which case the Watchdog Timer will overflow and reset the device. There are five bits, WE4~WE0, in the WDTC register to offer additional enable/disable and reset control of the Watchdog Timer. The WDT function will be disabled when the WE4~WE0 bits are set to a value of 10101B while the WDT function will be enabled if the WE4~WE0 bits are equal to 01010B. If the WE4~WE0 bits are set to any other values, other than 01010B and 10101B, it will reset the device after a delay time, t_{SRESET}. After power on these bits will have the value of 01010B.

WE4~WE0 Bits	WDT Function
10101B	Disable
01010B	Enable
Any other value	Reset MCU

Watchdog Timer Function Control

Under normal program operation, a Watchdog Timer time-out will initialise a device reset and set the status bit TO. However, if the system is in the SLEEP or IDLE Mode, when a Watchdog Timer time-out occurs, the TO bit in the status register will be set and only the Program Counter and Stack Pointer will be reset. Four methods can be adopted to clear the contents of the Watchdog Timer. The first is a WDTC software reset, which means a certain value except 01010B and 10101B written into the WE4~WE0 bit filed, the second is using the Watchdog Timer software clear instruction and the third is via a HALT instruction. The last is an external hardware reset, which means a low level on the external reset pin if the external reset pin function is selected by configuring the RSTC register.

There is only one method of using software instruction to clear the Watchdog Timer. That is to use the single "CLR WDT" instruction to clear the WDT.

The maximum time out period is when the 2^{18} division ratio is selected. As an example, with a 32kHz LIRC oscillator as its source clock, this will give a maximum watchdog period of around 8 seconds for the 2^{18} division ratio, and a minimum timeout of 8ms for the 2^{8} division ration.

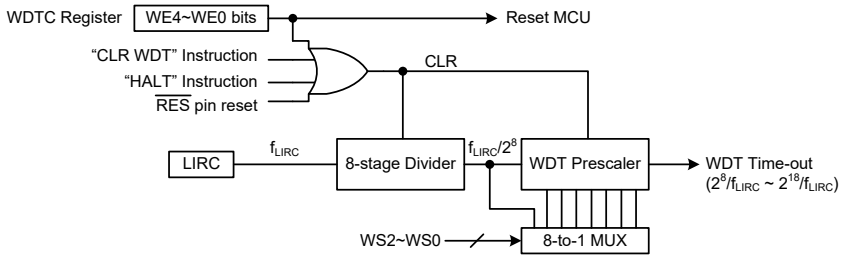

Watchdog Timer

Reset and Initialisation

A reset function is a fundamental part of any microcontroller ensuring that the device can be set to some predetermined condition irrespective of outside parameters. The most important reset condition is after power is first applied to the microcontroller. In this case, internal circuitry will ensure that the microcontroller, after a short delay, will be in a well-defined state and ready to execute the first program instruction. After this power-on reset, certain important internal registers will be set to defined states before the program commences. One of these registers is the Program Counter, which will be reset to zero forcing the microcontroller to begin program execution from the lowest Program Memory address.

In addition to the power-on reset, situations may arise where it is necessary to forcefully apply a reset condition when the device is running. One example of this is where after power has been applied and the device is already running, the $\overline{\text{RES}}$ line is forcefully pulled low. In such a case, known as a normal operation reset, some of the registers remain unchanged allowing the device to proceed with normal operation after the reset line is allowed to return high.

Another reset exists in the form of a Low Voltage Reset, LVR, where a full reset, similar to the $\overline{\text{RES}}$ reset is implemented in situations where the power supply voltage falls below a certain threshold. Another type of reset is when the Watchdog Timer overflows and resets the microcontroller. All types of reset operations result in different register conditions being setup.

Reset Functions

There are several ways in which a microcontroller reset can occur, through events occurring both internally and externally.

Power-on Reset

The most fundamental and unavoidable reset is the one that occurs after power is first applied to the microcontroller. As well as ensuring that the Program Memory begins execution from the first memory address, a power-on reset also ensures that certain other registers are preset to known conditions. All the I/O port and port control registers will power up in a high condition ensuring that all pins will be first set to inputs.

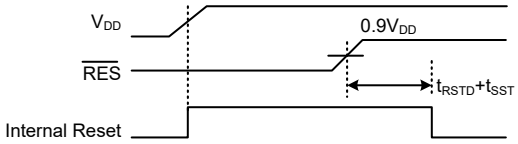

Power-On Reset Timing Chart

$\overline{\text{RES}}$ Pin Reset

As the reset pin is shared with I/O pins, the reset function must be selected using a control register, RSTC. Although the microcontroller has an internal RC reset function, if the VDD power supply rise time is not fast enough or does not stabilise quickly at power-on, the internal reset function may be incapable of providing proper reset operation. For this reason it is recommended that an external RC network is connected to the $\overline{\text{RES}}$ pin, whose additional time delay will ensure that the $\overline{\text{RES}}$ pin remains low for an extended period to allow the power supply to stabilise. During this time delay, normal operation of the microcontroller will be inhibited. After the $\overline{\text{RES}}$ line reaches a certain voltage value, the reset delay time t_{RSTD} is invoked to provide an extra delay time after which the microcontroller will begin normal operation. The abbreviation SST in the figures stands for System Start-up Timer.

For most applications a resistor connected between VDD and the $\overline{\text{RES}}$ pin and a capacitor connected

between VSS and the $\overline{RES}$ pin will provide a suitable external reset circuit. Any wiring connected to the $\overline{RES}$ pin should be kept as short as possible to minimise any stray noise interference.

For applications that operate within an environment where more noise is present the Enhanced Reset Circuit shown is recommended.

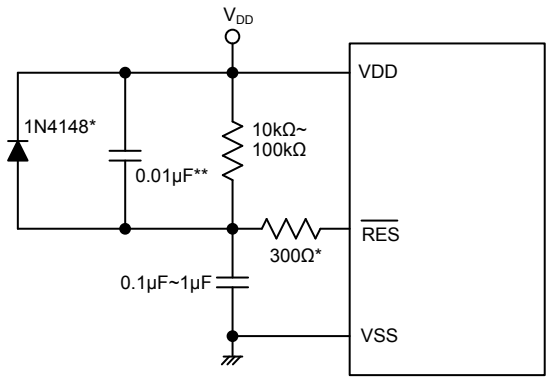

Note: * It is recommended that this component is added for added ESD protection.
** It is recommended that this component is added in environments where power line noise is significant.

External $\overline{RES}$ Circuit

Pulling the $\overline{RES}$ Pin low using external hardware will also execute a device reset. In this case, as in the case of other resets, the Program Counter will reset to zero and program execution initiated from this point.

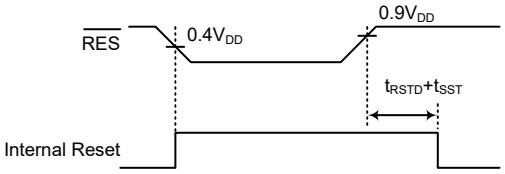

$\overline{RES}$ Reset Timing Chart

There is an internal reset control register, RSTC, which is used to select the external $\overline{RES}$ pin function and provide a reset when the device operates abnormally due to the environmental noise interference. If the content of the RSTC register is set to any value other than 01010101B or 10101010B, it will reset the device after a delay time, t_{SRESET}. After power on the register will have a value of 01010101B.

RSTC7~RSTC0 Bits	Reset Function
01010101B	I/O pin or other pin-shared functions
10101010B	$\overline{RES}$ pin
Any other value	Reset MCU

Internal Reset Function Control

• **RSTC Register**

Bit	7	6	5	4	3	2	1	0
Name	RSTC7	RSTC6	RSTC5	RSTC4	RSTC3	RSTC2	RSTC1	RSTC0
R/W	R/W	R/W	R/W	R/W	R/W	R/W	R/W	R/W
POR	0	1	0	1	0	1	0	1

Bit 7~0 **RSTC7~RSTC0**: Reset function control
01010101: PC2 or other pin-shared functions
10101010: $\overline{\text{RES}}$
Other values: Reset MCU

If these bits are changed due to adverse environmental conditions, the microcontroller will be reset. The reset operation will be activated after a delay time, t_{SRESET} and the RSTF bit in the RSTFC register will be set to 1.

All resets will reset this register to POR value except the WDT time out hardware warm reset. Note that when this register is set to 10101010B to select the $\overline{\text{RES}}$ pin function, this configuration has higher priority than other related pin-shared controls.

• **RSTFC Register**

Bit	7	6	5	4	3	2	1	0
Name	—	—	—	—	RSTF	LVRF	LRF	WRF
R/W	—	—	—	—	R/W	R/W	R/W	R/W
POR	—	—	—	—	0	x	0	0

"x": Unknown

Bit 7~4 Unimplemented, read as "0"

Bit 3 **RSTF**: Reset control register software reset flag
0: Not occurred
1: Occurred

This bit is set high by the RSTC control register software reset and cleared to zero by the application program. Note that this bit can only be cleared to 0 by the application program.

Bit 2 **LVRF**: LVR function reset flag
Described elsewhere.

Bit 1 **LRF**: LVR control register software reset flag
Described elsewhere.

Bit 0 **WRF**: WDT control register software reset flag
Described elsewhere.

Low Voltage Reset – LVR

The microcontroller contains a low voltage reset circuit in order to monitor the supply voltage of the device and provides an MCU reset should the value fall below a certain predefined level.

The LVR function can be enabled or disabled by the LVRC control register. If the supply voltage of the device drops to within a range of 0.9V~V_{LVR} such as might occur when changing the battery in battery powered applications, the LVR will automatically reset the device internally and the LVRF bit in the RSTFC register will also be set high. For a valid LVR signal, a low supply voltage, i.e., a voltage in the range between 0.9V~V_{LVR} must exist for a time greater than that specified by t_{LVR} in the LVD/LVR Electrical characteristics. If the low supply voltage state does not exceed this value, the LVR will ignore the low supply voltage and will not perform a reset function. The actual V_{LVR} value can be selected by the LVS bits in the LVRC register. If the LVS7~LVS0 bits are changed to some different values by environmental noise, the LVR will reset the device after a delay time, t_{SRESET}. When this happens, the LRF bit in the RSTFC register will be set high. After power on the LVRC register will have the value of 01100110B. Note that the LVR function will be automatically

disabled when the device enters the IDLE or SLEEP mode.

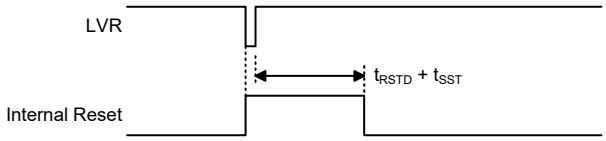

Low Voltage Reset Timing Chart

- **LVRC Register**

Bit	7	6	5	4	3	2	1	0
Name	LVS7	LVS6	LVS5	LVS4	LVS3	LVS2	LVS1	LVS0
R/W	R/W	R/W	R/W	R/W	R/W	R/W	R/W	R/W
POR	0	1	1	0	0	1	1	0

Bit 7~0 **LVS7~LVS0**: LVR voltage selection
01100110: 1.7V
01010101: 1.9V
00110011: 2.55V
10011001:3.15V
10101010: 3.8V
11110000: LVR disable
Any other value: Generates MCU reset – register is reset to POR value

When an actual low voltage condition occurs, as specified by one of the five defined LVR voltage values above, an MCU reset will be generated. The reset operation will be activated after the low voltage condition keeps more than a t_{LVR} time. In this situation the register contents will remain the same after such a reset occurs.

Any register value, other than 11110000B and the five defined LVR values above, will also result in the generation of an MCU reset. The reset operation will be activated after a delay time, t_{SRESET}. However in this situation the register contents will be reset to the POR value.

- **RSTFC Register**

Bit	7	6	5	4	3	2	1	0
Name	—	—	—	—	RSTF	LVRF	LRF	WRF
R/W	—	—	—	—	R/W	R/W	R/W	R/W
POR	—	—	—	—	0	x	0	0

"x": Unknown

Bit 7~4 Unimplemented, read as "0"

Bit 3 **RSTF**: Reset control register software reset flag
Described elsewhere.

Bit 2 **LVRF**: LVR function reset flag
0: Not occur
1: Occurred
This bit is set high when a specific Low Voltage Reset situation condition occurs. This bit can only be cleared to zero by the application program.

Bit 1 **LRF**: LVR control register software reset flag
0: Not occur
1: Occurred
This bit is set high if the LVRC register contains any non-defined LVR voltage register values. This in effect acts like a software-reset function. This bit can only be cleared to zero by the application program.

Bit 0 **WRF**: WDT control register software reset flag
Refer to the Watchdog Timer Control Register section.

IAP Reset

When a specific value of "55H" is written into the FC1 register, a reset signal will be generated to reset the whole device. Refer to the IAP section for more associated details.

Watchdog Time-out Reset during Normal Operation

The Watchdog time-out Reset during normal operation in the FAST or SLOW mode, the Watchdog time-out flag TO will be set high.

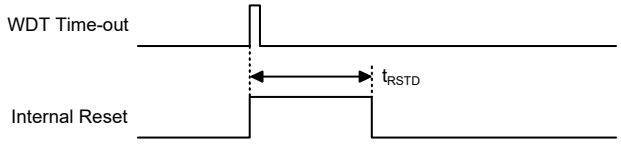

WDT Time-out Reset during Normal Operation Timing Chart

Watchdog Time-out Reset during SLEEP or IDLE Mode

The Watchdog time-out Reset during SLEEP or IDLE Mode is a little different from other kinds of reset. Most of the conditions remain unchanged except that the Program Counter and the Stack Pointer will be cleared to "0" and the TO flag will be set to "1". Refer to the System Start Up Time Characteristics for t_{SST} details.

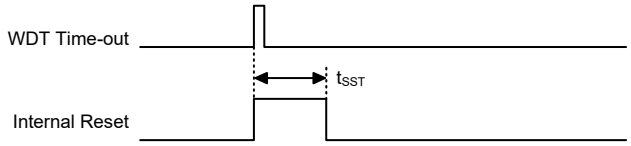

WDT Time-out Reset during SLEEP or IDLE Timing Chart

Reset Initial Conditions

The different types of reset described affect the reset flags in different ways. These flags, known as PDF and TO are located in the status register and are controlled by various microcontroller operations, such as the SLEEP or IDLE Mode function or Watchdog Timer. The reset flags are shown in the table:

TO	PDF	Reset Conditions
0	0	Power-on reset
u	u	$\overline{\text{RES}}$ or LVR reset during FAST or SLOW Mode operation
1	u	WDT time-out reset during FAST or SLOW Mode operation
1	1	WDT time-out reset during IDLE or SLEEP Mode operation

"u" stands for unchanged

The following table indicates the way in which the various components of the microcontroller are affected after a power-on reset occurs.

Item	Condition after Reset
Program Counter	Reset to zero
Interrupts	All interrupts will be disabled
WDT, Time Bases	Cleared after reset, WDT begins counting
Timer Modules	Timer Modules will be turned off
Input/Output Ports	I/O ports will be set as inputs
Stack Pointer	Stack Pointer will point to the top of the stack

The different kinds of resets all affect the internal registers of the microcontroller in different ways. To ensure reliable continuation of normal program execution after a reset occurs, it is important to know what condition the microcontroller is in after a particular reset occurs. The following table describes how each type of reset affects each of the microcontroller internal registers.

Register Name	Reset (Power On)	$\overline{\text{RES}}$ Reset (Normal Operation)	LVR Reset (Normal Operation)	WDT Time-out (Normal Operation)	WDT Time-out (IDLE/SLEEP)
IAR0	0000 0000	0000 0000	0000 0000	0000 0000	uuuu uuuu
MP0	0000 0000	0000 0000	0000 0000	0000 0000	uuuu uuuu
IAR1	0000 0000	0000 0000	0000 0000	0000 0000	uuuu uuuu
MP1L	0000 0000	0000 0000	0000 0000	0000 0000	uuuu uuuu
MP1H	0000 0000	0000 0000	0000 0000	0000 0000	uuuu uuuu
ACC	xxxx xxxx	uuuu uuuu	uuuu uuuu	uuuu uuuu	uuuu uuuu
PCL	0000 0000	0000 0000	0000 0000	0000 0000	0000 0000
TBLP	xxxx xxxx	uuuu uuuu	uuuu uuuu	uuuu uuuu	uuuu uuuu
TBLH	xxxx xxxx	uuuu uuuu	uuuu uuuu	uuuu uuuu	uuuu uuuu
TBHP	---- xxxx	---- uuuu	---- uuuu	---- uuuu	---- uuuu
STATUS	xx00 xxxx	uuuu uuuu	uu01 uuuu	uu1u uuuu	uu11 uuuu
IAR2	0000 0000	0000 0000	0000 0000	0000 0000	uuuu uuuu
MP2L	0000 0000	0000 0000	0000 0000	0000 0000	uuuu uuuu
MP2H	0000 0000	0000 0000	0000 0000	0000 0000	uuuu uuuu
RSTFC	---- 0x00	---- uuuu	---- u1uu	---- uuuu	---- uuuu
INTEG	---- 0000	---- 0000	---- 0000	---- 0000	---- uuuu
INTC0	-000 0000	-000 0000	-000 0000	-000 0000	-uuu uuuu
INTC1	0000 0000	0000 0000	0000 0000	0000 0000	uuuu uuuu
INTC2	0000 0000	0000 0000	0000 0000	0000 0000	uuuu uuuu
PA	1111 1111	1111 1111	1111 1111	1111 1111	uuuu uuuu
PAC	1111 1111	1111 1111	1111 1111	1111 1111	uuuu uuuu
PAPU	0000 0000	0000 0000	0000 0000	0000 0000	uuuu uuuu
PAWU	0000 0000	0000 0000	0000 0000	0000 0000	uuuu uuuu
LVDC	--00 -000	--00 -000	--00 -000	--00 -000	--uu -uuu
SCC	000- 0000	000- 0000	000- 0000	000- 0000	uuu- uuuu
WDTC	0101 0011	0101 0011	0101 0011	0101 0011	uuuu uuuu
TB0C	0--- -000	0--- -000	0--- -000	0--- -000	u--- -uuu
HIRCC	---- 0001	---- 0001	---- 0001	---- 0001	---- uuuu
LVRC	0110 0110	0110 0110	uuuu uuuu	0110 0110	uuuu uuuu
EEA	-000 0000	-000 0000	-000 0000	-000 0000	-uuu uuuu
EED	0000 0000	0000 0000	0000 0000	0000 0000	uuuu uuuu
SADOL	xxxx ----	xxxx ----	xxxx ----	xxxx ----	uuuu ---- (ADRFS=0) uuuu uuuu (ADRFS=1)
SADOH	xxxx xxxx	xxxx xxxx	xxxx xxxx	xxxx xxxx	uuuu uuuu (ADRFS=0) ---- uuuu (ADRFS=1)
SADC0	0000 0000	0000 0000	0000 0000	0000 0000	uuuu uuuu
SADC1	0000 -000	0000 -000	0000 -000	0000 -000	uuuu -uuu
SADC2	0--0 0000	0--0 0000	0--0 0000	0--0 0000	u--u uuuu
PB	-111 1111	-111 1111	-111 1111	-111 1111	-uuu uuuu
PBC	-111 1111	-111 1111	-111 1111	-111 1111	-uuu uuuu

Register Name	Reset (Power On)	$\overline{\text{RES}}$ Reset (Normal Operation)	LVR Reset (Normal Operation)	WDT Time-out (Normal Operation)	WDT Time-out (IDLE/SLEEP)
PBPU	-000 0000	-000 0000	-000 0000	-000 0000	-uuu uuuu
CTMC0	0000 0---	0000 0---	0000 0---	0000 0---	uuuu u---
CTMC1	0000 0000	0000 0000	0000 0000	0000 0000	uuuu uuuu
CTMDL	0000 0000	0000 0000	0000 0000	0000 0000	uuuu uuuu
CTMDH	0000 0000	0000 0000	0000 0000	0000 0000	uuuu uuuu
CTMAL	0000 0000	0000 0000	0000 0000	0000 0000	uuuu uuuu
CTMAH	0000 0000	0000 0000	0000 0000	0000 0000	uuuu uuuu
CTMRP	0000 0000	0000 0000	0000 0000	0000 0000	uuuu uuuu
STMC0	0000 0---	0000 0---	0000 0---	0000 0---	uuuu u---
STMC1	0000 0000	0000 0000	0000 0000	0000 0000	uuuu uuuu
STMDL	0000 0000	0000 0000	0000 0000	0000 0000	uuuu uuuu
STMDH	0000 0000	0000 0000	0000 0000	0000 0000	uuuu uuuu
STMAL	0000 0000	0000 0000	0000 0000	0000 0000	uuuu uuuu
STMAH	0000 0000	0000 0000	0000 0000	0000 0000	uuuu uuuu
STMRP	0000 0000	0000 0000	0000 0000	0000 0000	uuuu uuuu
PTMC0	0000 0---	0000 0---	0000 0---	0000 0---	uuuu u---
PTMC1	0000 0000	0000 0000	0000 0000	0000 0000	uuuu uuuu
PTMDL	0000 0000	0000 0000	0000 0000	0000 0000	uuuu uuuu
PTMDH	---- --00	---- --00	---- --00	---- --00	---- --uu
PTMAL	0000 0000	0000 0000	0000 0000	0000 0000	uuuu uuuu
PTMAH	---- --00	---- --00	---- --00	---- --00	---- --uu
PTMRPL	0000 0000	0000 0000	0000 0000	0000 0000	uuuu uuuu
PTMRPH	---- --00	---- --00	---- --00	---- --00	---- --uu
PC	-111 1111	-111 1111	-111 1111	-111 1111	-uuu uuuu
PCC	-111 1111	-111 1111	-111 1111	-111 1111	-uuu uuuu
PCPU	-000 0000	-000 0000	-000 0000	-000 0000	-uuu uuuu
SIMC0	111- 0000	111- 0000	111- 0000	111- 0000	uuu- uuuu
SIMC1	1000 0001	1000 0001	1000 0001	1000 0001	uuuu uuuu
SIMD	xxxx xxxx	xxxx xxxx	xxxx xxxx	xxxx xxxx	uuuu uuuu
SIMA	0000 0000	0000 0000	0000 0000	0000 0000	uuuu uuuu
SIMTOC	0000 0000	0000 0000	0000 0000	0000 0000	uuuu uuuu
VBGRC	---- ---0	---- ---0	---- ---0	---- ---0	---- ---u
TB1C	0--- -000	0--- -000	0--- -000	0--- -000	u--- -uuu
MFI0	--00 --00	--00 --00	--00 --00	--00 --00	--uu --uu
MFI1	0000 0000	0000 0000	0000 0000	0000 0000	uuuu uuuu
MFI2	--00 --00	--00 --00	--00 --00	--00 --00	--uu --uu
SLEDC0	0000 0000	0000 0000	0000 0000	0000 0000	uuuu uuuu
SLEDC1	--00 0000	--00 0000	--00 0000	--00 0000	--uu uuuu
IFS	--00 0000	--00 0000	--00 0000	--00 0000	--uu uuuu
PD	---- 1111	---- 1111	---- 1111	---- 1111	---- uuuu
PDC	---- 1111	---- 1111	---- 1111	---- 1111	---- uuuu
PDPU	---- 0000	---- 0000	---- 0000	---- 0000	---- uuuu
LVPUC	---- ---0	---- ---0	---- ---0	---- ---0	---- ---u
PAS0	0000 0000	0000 0000	0000 0000	0000 0000	uuuu uuuu
PAS1	0000 0000	0000 0000	0000 0000	0000 0000	uuuu uuuu
PBS0	0000 0000	0000 0000	0000 0000	0000 0000	uuuu uuuu
PBS1	--00 0000	--00 0000	--00 0000	--00 0000	--uu uuuu

Register Name	Reset (Power On)	$\overline{\text{RES}}$ Reset (Normal Operation)	LVR Reset (Normal Operation)	WDT Time-out (Normal Operation)	WDT Time-out (IDLE/SLEEP)
PCS0	0000 0000	0000 0000	0000 0000	0000 0000	uuuu uuuu
PCS1	--00 0000	--00 0000	--00 0000	--00 0000	--uu uuuu
PDS0	0000 0000	0000 0000	0000 0000	0000 0000	uuuu uuuu
PSC0R	---- --00	---- --00	---- --00	---- --00	---- --uu
PSC1R	---- --00	---- --00	---- --00	---- --00	---- --uu
RSTC	0101 0101	0101 0101	0101 0101	0101 0101	uuuu uuuu
FC0	0000 0000	0000 0000	0000 0000	0000 0000	uuuu uuuu
FC1	0000 0000	0000 0000	0000 0000	0000 0000	uuuu uuuu
FC2	---- --00	---- --00	---- --00	---- --00	---- --uu
FARL	0000 0000	0000 0000	0000 0000	0000 0000	uuuu uuuu
FARH	---- 0000	---- 0000	---- 0000	---- 0000	---- uuuu
FD0L	0000 0000	0000 0000	0000 0000	0000 0000	uuuu uuuu
FD0H	0000 0000	0000 0000	0000 0000	0000 0000	uuuu uuuu
FD1L	0000 0000	0000 0000	0000 0000	0000 0000	uuuu uuuu
FD1H	0000 0000	0000 0000	0000 0000	0000 0000	uuuu uuuu
FD2L	0000 0000	0000 0000	0000 0000	0000 0000	uuuu uuuu
FD2H	0000 0000	0000 0000	0000 0000	0000 0000	uuuu uuuu
FD3L	0000 0000	0000 0000	0000 0000	0000 0000	uuuu uuuu
FD3H	0000 0000	0000 0000	0000 0000	0000 0000	uuuu uuuu
UCR3	---- ---0	---- ---0	---- ---0	---- ---0	---- ---u
EEC	0000 0000	0000 0000	0000 0000	0000 0000	uuuu uuuu

Note: “u” stands for unchanged
“x” stands for unknown
“-” stands for unimplemented

Input/Output Ports

Holtek microcontrollers offer considerable flexibility on their I/O ports. With the input or output designation of every pin fully under user program control, pull-high selections for all ports and wake-up selections on certain pins, the user is provided with an I/O structure to meet the needs of a wide range of application possibilities.

The device provides bidirectional input/output lines labeled with port name PA~PD. These I/O ports are mapped to the RAM Data Memory with specific addresses as shown in the Special Purpose Data Memory Structure diagram. All of these I/O ports can be used for input and output operations. For input operation, these ports are non-latching, which means the inputs must be ready at the T2 rising edge of instruction "MOV A, [m]", where m denotes the port address. For output operation, all the data is latched and remains unchanged until the output latch is rewritten.

Register Name	Bit							
	7	6	5	4	3	2	1	0
PA	PA7	PA6	PA5	PA4	PA3	PA2	PA1	PA0
PAC	PAC7	PAC6	PAC5	PAC4	PAC3	PAC2	PAC1	PAC0
PAPU	PAPU7	PAPU6	PAPU5	PAPU4	PAPU3	PAPU2	PAPU1	PAPU0
PAWU	PAWU7	PAWU6	PAWU5	PAWU4	PAWU3	PAWU2	PAWU1	PAWU0
PB	—	PB6	PB5	PB4	PB3	PB2	PB1	PB0
PBC	—	PBC6	PBC5	PBC4	PBC3	PBC2	PBC1	PBC0
PBPU	—	PBPU6	PBPU5	PBPU4	PBPU3	PBPU2	PBPU1	PBPU0
PC	—	PC6	PC5	PC4	PC3	PC2	PC1	PC0
PCC	—	PCC6	PCC5	PCC4	PCC3	PCC2	PCC1	PCC0
PCPU	—	PCPU6	PCPU5	PCPU4	PCPU3	PCPU2	PCPU1	PCPU0
PD	—	—	—	—	PD3	PD2	PD1	PD0
PDC	—	—	—	—	PDC3	PDC2	PDC1	PDC0
PDPU	—	—	—	—	PDPU3	PDPU2	PDPU1	PDPU0
LVPUC	—	—	—	—	—	—	—	LVPU

"—": Unimplemented, read as "0"

I/O Logic Function Register List

Pull-high Resistors

Many product applications require pull-high resistors for their switch inputs usually requiring the use of an external resistor. To eliminate the need for these external resistors, all I/O pins, when configured as a digital input have the capability of being connected to an internal pull-high resistor. These pull-high resistors are selected using the relevant pull-high control registers and are implemented using weak PMOS transistors. These pull-high resistors are selected using the LVPUC and PxPU registers, and are implemented using weak PMOS transistors. The PxPU register is used to determine whether the pull-high function is enabled or not while the LVPUC register is used to select the pull-high resistors value for low voltage power supply applications.

Note that the pull-high resistor can be controlled by the relevant pull-high control register only when the pin-shared functional pin is selected as a digital input or NMOS output. Otherwise, the pull-high resistors can not be enabled.

• **PxPU Register**

Bit	7	6	5	4	3	2	1	0
Name	PxPU7	PxPU6	PxPU5	PxPU4	PxPU3	PxPU2	PxPU1	PxPU0
R/W	R/W	R/W	R/W	R/W	R/W	R/W	R/W	R/W
POR	0	0	0	0	0	0	0	0

PxPUn: I/O Port x Pin pull-high function control
0: Disable
1: Enable

The PxPUn bit is used to control the pin pull-high function. Here the "x" can be A, B, C or D. However, the actual available bits for each I/O Port may be different.

Special attention has to be paid to the unbonded lines, PB0~PB1, PB4~PB5, PC0~PC1, PC3~PC6 and PD3, which should either be set as outputs or if set as inputs must have pull-high resistors connected to avoid unwanted power consumption result from floating input conditions. For the PB2 and PD0~PD2 lines, which are internally connected to the accumulative cell voltage monitor inputs, the corresponding PBPU2 and PDPU0~PDPU2 bits should be kept as "0" after power on.

• **LVPUC Register**

Bit	7	6	5	4	3	2	1	0
Name	—	—	—	—	—	—	—	LVPU
R/W	—	—	—	—	—	—	—	R/W
POR	—	—	—	—	—	—	—	0

Bit 7~1 Unimplemented, read as "0"

Bit 0 **LVPU**: Pull-high resistor selection when low voltage power supply
0: All pin pull-high resistors are 60kΩ @ 3V
1: All pin pull-high resistors are 15kΩ @ 3V

This bit is used to select the pull-high resistor value for low voltage power supply applications. The LVPU bit is only available when the corresponding pin pull-high function is enabled by setting the relevant pull-high control bit high. This bit will have no effect when the pull-high function is disabled.

Port A Wake-up

The HALT instruction forces the microcontroller into the SLEEP or IDLE Mode which preserves power, a feature that is important for battery and other low-power applications. Various methods exist to wake-up the microcontroller, one of which is to change the logic condition on one of the Port A pins from high to low. This function is especially suitable for applications that can be woken up via external switches. Each pin on Port A can be selected individually to have this wake-up feature using the PAWU register.

Note that the wake-up function can be controlled by the wake-up control registers only when the pin is selected as a general purpose input and the MCU enters the IDLE or SLEEP mode.

• **PAWU Register**

Bit	7	6	5	4	3	2	1	0
Name	PAWU7	PAWU6	PAWU5	PAWU4	PAWU3	PAWU2	PAWU1	PAWU0
R/W	R/W	R/W	R/W	R/W	R/W	R/W	R/W	R/W
POR	0	0	0	0	0	0	0	0

Bit 7~0 **PAWU7~PAWU0**: PA7~PA0 wake-up function control
0: Disable
1: Enable

I/O Port Control Registers

Each I/O port has its own control register known as PAC~PDC, to control the input/output configuration. With this control register, each CMOS output or input can be reconfigured dynamically under software control. Each pin of the I/O ports is directly mapped to a bit in its associated port control register. For the I/O pin to function as an input, the corresponding bit of the control register must be written as a "1". This will then allow the logic state of the input pin to be directly read by instructions. When the corresponding bit of the control register is written as a "0", the I/O pin will be set as a CMOS output. If the pin is currently set as an output, instructions can still be used to read the output register.

However, it should be noted that the program will in fact only read the status of the output data latch and not the actual logic status of the output pin.

- **PxC Register**

Bit	7	6	5	4	3	2	1	0
Name	PxC7	PxC6	PxC5	PxC4	PxC3	PxC2	PxC1	PxC0
R/W	R/W	R/W	R/W	R/W	R/W	R/W	R/W	R/W
POR	1	1	1	1	1	1	1	1

PxCn: I/O Port x Pin type selection
0: Output
1: Input

The PxCn bit is used to control the pin type selection. Here the "x" can be A, B, C or D. However, the actual available bits for each I/O Port may be different.

Note that for the PD0~PD2 and PB2 lines, which are internally connected to the accumulative cell voltage monitor inputs, DN0, SDA, SCL and DCN, respectively, the corresponding PDC0~PDC2 and PBC2 bits should be cleared to zero to enable the PD0~PD2 and PB2 high/low level outputs, thus controlling the accumulative cell voltage monitor operations. Special attention has to be paid to the unbonded lines, PB0~PB1, PB4~PB5, PC0~PC1, PC3~PC6 and PD3 which should either be set as outputs or if set as inputs must have pull-high resistors connected to avoid unwanted power consumption result from floating input conditions.

I/O Port Source Current Control

The device supports different output source current driving capability for each I/O port. With the selection register, SLEDCn, specific I/O port can support four levels of the source current driving capability. These source current selection bits are available when the corresponding pin is configured as a CMOS output. Otherwise, these select bits have no effect. Users should refer to the Input/Output Characteristics section to select the desired output source current for different applications.

Register Name	Bit							
	7	6	5	4	3	2	1	0
SLEDC0	SLEDC07	SLEDC06	SLEDC05	SLEDC04	SLEDC03	SLEDC02	SLEDC01	SLEDC00
SLEDC1	—	—	D5	D4	D3	D2	SLEDC11	SLEDC10

I/O Port Source Current Control Register List

• **SLEDC0 Register**

Bit	7	6	5	4	3	2	1	0
Name	SLEDC07	SLEDC06	SLEDC05	SLEDC04	SLEDC03	SLEDC02	SLEDC01	SLEDC00
R/W	R/W	R/W	R/W	R/W	R/W	R/W	R/W	R/W
POR	0	0	0	0	0	0	0	0

Bit 7~6 **SLEDC07~SLEDC06**: PB6 Source Current Selection
00: Source current = Level 0 (min.)
01: Source current = Level 1
10: Source current = Level 2
11: Source current = Level 3 (max.)

Bit 5~4 **SLEDC05~SLEDC04**: PB3 Source Current Selection
00: Source current = Level 0 (min.)
01: Source current = Level 1
10: Source current = Level 2
11: Source current = Level 3 (max.)

Bit 3~2 **SLEDC03~SLEDC02**: PA7~PA4 Source Current Selection
00: Source current = Level 0 (min.)
01: Source current = Level 1
10: Source current = Level 2
11: Source current = Level 3 (max.)

Bit 1~0 **SLEDC01~SLEDC00**: PA3~PA0 Source Current Selection
00: Source current = Level 0 (min.)
01: Source current = Level 1
10: Source current = Level 2
11: Source current = Level 3 (max.)

• **SLEDC1 Register**

Bit	7	6	5	4	3	2	1	0
Name	—	—	D5	D4	D3	D2	SLEDC11	SLEDC10
R/W	—	—	R/W	R/W	R/W	R/W	R/W	R/W
POR	—	—	0	0	0	0	0	0

Bit 7~6 Unimplemented, read as “0”

Bit 5~2 **D5~D2**: These bits should be kept unchanged after power-on.

Bit 1~0 **SLEDC11~SLEDC10**: PC2 Source Current Selection
00: Source current = Level 0 (min.)
01: Source current = Level 1
10: Source current = Level 2
11: Source current = Level 3 (max.)

Pin-shared Functions

The flexibility of the microcontroller range is greatly enhanced by the use of pins that have more than one function. Limited numbers of pins can force serious design constraints on designers but by supplying pins with multi-functions, many of these difficulties can be overcome. For these pins, the desired function of the multi-function I/O pins is selected by a series of registers via the application program control.

Pin-shared Function Selection Registers

The limited number of supplied pins in a package can impose restrictions on the amount of functions a certain device can contain. However by allowing the same pins to share several different functions and providing a means of function selection, a wide range of different functions can be incorporated into even relatively small package sizes. The device includes Port "x" output function Selection register "n", labeled as PxSn, and Input Function Selection register "n", labeled as IFS, which can select the desired functions of the multi-function pin-shared pins.

The most important point to note is to make sure that the desired pin-shared function is properly selected and also deselected. For most pin-shared functions, to select the desired pin-shared function, the pin-shared function should first be correctly selected using the corresponding pin-shared control register. After that the corresponding peripheral functional setting should be configured and then the peripheral function can be enabled. However, a special point must be noted for some digital input pins, such as INTn, xTCKn, etc, which share the same pin-shared control configuration with their corresponding general purpose I/O functions when setting the relevant pin-shared control bit fields. To select these pin functions, in addition to the necessary pin-shared control and peripheral functional setup aforementioned, they must also be setup as an input by setting the corresponding bit in the I/O port control register. To correctly deselect the pin-shared function, the peripheral function should first be disabled and then the corresponding pin-shared function control register can be modified to select other pin-shared functions.

Register Name	Bit							
	7	6	5	4	3	2	1	0
PAS0	PAS07	PAS06	PAS05	PAS04	PAS03	PAS02	PAS01	PAS00
PAS1	PAS17	PAS16	PAS15	PAS14	PAS13	PAS12	PAS11	PAS10
PBS0	PBS07	PBS06	PBS05	PBS04	D3	D2	D1	D0
PBS1	—	—	PBS15	PBS14	D3	D2	D1	D0
PCS0	D7	D6	PCS05	PCS04	D3	D2	D1	D0
PCS1	—	—	D5	D4	D3	D2	D1	D0
PDS0	D7	D6	D5	D4	D3	D2	PDS01	PDS00
IFS	—	—	INT1PS	INT0PS	SDI_SDAPS	SCK_SCLPS	SCSBPS	RXPS

Pin-shared Function Selection Register List

- **PAS0 Register**

Bit	7	6	5	4	3	2	1	0
Name	PAS07	PAS06	PAS05	PAS04	PAS03	PAS02	PAS01	PAS00
R/W	R/W	R/W	R/W	R/W	R/W	R/W	R/W	R/W
POR	0	0	0	0	0	0	0	0

Bit 7~6 **PAS07~PAS06**: PA3 Pin-Shared Function Selection
00: PA3
01: SDA
10: Reserved
11: Reserved

Bit 5~4 **PAS05~PAS04**: PA2 Pin-Shared Function Selection
00: PA2/INT1
01: PA2/INT1
10: PA2/INT1
11: Reserved

Bit 3~2 **PAS03~PAS02**: PA1 Pin-Shared Function Selection
00: PA1/INT0
01: PA1/INT0
10: Reserved
11: Reserved

Bit 1~0 **PAS01~PAS00**: PA0 Pin-Shared Function Selection
00: PA0
01: PA0
10: STP
11: Reserved

- **PAS1 Register**

Bit	7	6	5	4	3	2	1	0
Name	PAS17	PAS16	PAS15	PAS14	PAS13	PAS12	PAS11	PAS10
R/W	R/W	R/W	R/W	R/W	R/W	R/W	R/W	R/W
POR	0	0	0	0	0	0	0	0

Bit 7~6 **PAS17~PAS16**: PA7 Pin-Shared Function Selection
00: PA7
01: PTP
10: Reserved
11: AN6

Bit 5~4 **PAS15~PAS14**: PA6 Pin-Shared Function Selection
00: PA6/CTCK
01: Reserved
10: AN5
11: VREF

Bit 3~2 **PAS13~PAS12**: PA5 Pin-Shared Function Selection
00: PA5/VOUT
01: Reserved
10: AN4
11: VREFI

Note that the accumulative cell voltage monitor output pin VOUT is connected to PA5.

Bit 1~0 **PAS11~PAS10**: PA4 Pin-Shared Function Selection
00: PA4/PTCK
01: PA4/PTCK
10: Reserved
11: AN3

• **PBS0 Register**

Bit	7	6	5	4	3	2	1	0
Name	PBS07	PBS06	PBS05	PBS04	D3	D2	D1	D0
R/W	R/W	R/W	R/W	R/W	R/W	R/W	R/W	R/W
POR	0	0	0	0	0	0	0	0

Bit 7~6 **PBS07~PBS06**: PB3 Pin-Shared Function Selection
00: PB3
01: CTP
10: Reserved
11: AN7

Bit 5~4 **PBS05~PBS04**: PB2 Pin-Shared Function Selection
00: PB2
01: Reserved
10: Reserved
11: Reserved

Bit 3~0 **D3~D0**: These bits should be kept unchanged after power-on

• **PBS1 Register**

Bit	7	6	5	4	3	2	1	0
Name	—	—	PBS15	PBS14	D3	D2	D1	D0
R/W	—	—	R/W	R/W	R/W	R/W	R/W	R/W
POR	—	—	0	0	0	0	0	0

Bit 7~6 Unimplemented, read as “0”

Bit 5~4 **PBS15~PBS14**: PB6 Pin-Shared function selection
00: PB6
01: SCL
10: Reserved
11: Reserved

Bit 3~0 **D3~D0**: These bits should be kept unchanged after power-on

• **PCS0 Register**

Bit	7	6	5	4	3	2	1	0
Name	D7	D6	PCS05	PCS04	D3	D2	D1	D0
R/W	R/W	R/W	R/W	R/W	R/W	R/W	R/W	R/W
POR	0	0	0	0	0	0	0	0

Bit 7~6 **D7~D6**: These bits should be kept unchanged after power-on

Bit 5~4 **PCS05~PCS04**: PC2 Pin-Shared Function Selection
00: PC2/$\overline{\text{RES}}$
01: PC2/$\overline{\text{RES}}$
10: Reserved
11: Reserved

Bit 3~0 **D3~D0**: These bits should be kept unchanged after power-on

• **PCS1 Register**

Bit	7	6	5	4	3	2	1	0
Name	—	—	D5	D4	D3	D2	D1	D0
R/W	—	—	R/W	R/W	R/W	R/W	R/W	R/W
POR	—	—	0	0	0	0	0	0

Bit 7~6 Unimplemented, read as "0"

Bit 5~0 **D5~D0**: These bits should be kept unchanged after power-on

• **PDS0 Register**

Bit	7	6	5	4	3	2	1	0
Name	D7	D6	D5	D4	D3	D2	PDS01	PDS00
R/W	R/W	R/W	R/W	R/W	R/W	R/W	R/W	R/W
POR	0	0	0	0	0	0	0	0

Bit 7~6 **D7~D2**: These bits should be kept unchanged after power-on

Bit 1~0 **PDS01~PDS00**: PD0 Pin-Shared function selection
00: PD0
01: PD0
10: PTP
11: Reserved

• **IFS Register**

Bit	7	6	5	4	3	2	1	0
Name	—	—	INT1PS	INT0PS	SDI_ SDAPS	SCK_ SCLPS	SCSBPS	RXPS
R/W	—	—	R/W	R/W	R/W	R/W	R/W	R/W
POR	—	—	0	0	0	0	0	0

Bit 7~6 Unimplemented, read as "0"

Bit 5 **INT1PS**: INT1 input source pin selection
0: Reserved
1: PA2
This bit should be kept as "1"

Bit 4 **INT0PS**: INT0 input source pin selection
0: Reserved
1: PA1
This bit should be kept as "1"

Bit 3 **SDI_SDAPS**: SDA input source pin selection
0: Reserved
1: PA3
This bit should be kept as "1"

Bit 2 **SCK_SCLPS**: SCL input source pin selection
0: Reserved
1: PB6
This bit should be kept as "1"

Bit 1 **SCSBPS**: This bit should be kept unchanged after power on

Bit 0 **RXPS**: This bit should be kept unchanged after power on

I/O Pin Structures

The accompanying diagram illustrates the internal structure of the I/O logic function. As the exact logical construction of the I/O pin will differ from this drawing, it is supplied as a guide only to assist with the functional understanding of the I/O logic function. The wide range of pin-shared structures does not permit all types to be shown.

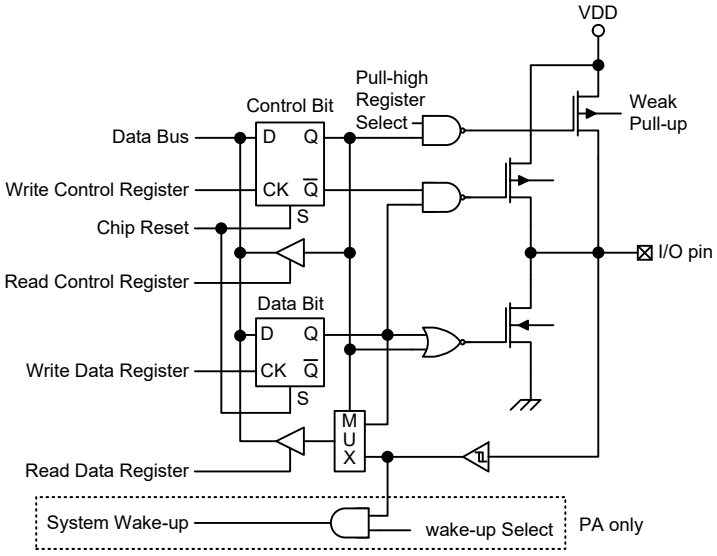

Logic Function Input/Output Structure

Programming Considerations

Within the user program, one of the first things to consider is port initialisation. After a reset, all of the I/O data and port control registers will be set high. This means that all I/O pins will default to an input state, the level of which depends on the other connected circuitry and whether pull-high selections have been chosen. If the port control registers are then programmed to set some pins as outputs, these output pins will have an initial high output value unless the associated port data registers are first programmed. Selecting which pins are inputs and which are outputs can be achieved byte-wide by loading the correct values into the appropriate port control register or by programming individual bits in the port control register using the “SET [m].i” and “CLR [m].i” instructions. Note that when using these bit control instructions, a read-modify-write operation takes place. The microcontroller must first read in the data on the entire port, modify it to the required new bit values and then rewrite this data back to the output ports.

Port A has the additional capability of providing wake-up functions. When the device is in the SLEEP or IDLE Mode, various methods are available to wake the device up. One of these is a high to low transition of any of the Port A pins. Single or multiple pins on Port A can be set to have this function.

Timer Modules – TM

One of the most fundamental functions in any microcontroller device is the ability to control and measure time. To implement time related functions the device includes a Timer Modules, abbreviated to the name TM. The TM is a multi-purpose timing unit and serves to provide operations such as Timer/Counter, Compare Match Output and Single Pulse Output as well as being the functional unit for the generation of PWM signals. Each of the TM has two individual interrupts. The addition of input and output pins for the TM ensures that users are provided with timing units with a wide and flexible range of features.

The common features of the different TM types are described here with more detailed information provided in the individual Compact, Standard and Periodic Type TM sections.

Introduction

The device contains three TMs and each individual TM can be categorised as a certain type, namely Compact Type TM, Standard Type TM or Periodic Type TM. Although similar in nature, the different TM types vary in their feature complexity. The common features to all of the Compact, Standard and Periodic TMs will be described in this section and the detailed operation regarding each of the TM types will be described in separate sections. The main features and differences between the three types of TMs are summarised in the accompanying table.

TM Function	CTM	STM	PTM
Timer/Counter	√	√	√
Compare Match Output	√	√	√
PWM Output	√	√	√
Single Pulse Output	—	√	√
PWM Alignment	Edge	Edge	Edge
PWM Adjustment Period & Duty	Duty or Period	Duty or Period	Duty or Period

TM Function Summary

TM Operation

The different types of TM offer a diverse range of functions, from simple timing operations to PWM signal generation. The key to understanding how the TM operates is to see it in terms of a free running count-up counter whose value is then compared with the value of pre-programmed internal comparators. When the free running count-up counter has the same value as the pre-programmed comparator, known as a compare match situation, a TM interrupt signal will be generated which can clear the counter and perhaps also change the condition of the TM output pin. The internal TM counter is driven by a user selectable clock source, which can be an internal clock or an external pin.

TM Clock Source

The clock source which drives the main counter in each TM can originate from various sources. The selection of the required clock source is implemented using the xTCK2~xTCK0 bits in the xTM control registers, where “x” stands for C, S or P type TM. The clock source can be a ratio of the system clock, f_{SYS}, or the internal high clock, f_H, the f_{SUB} clock source or the external xTCK pin. The xTCK pin clock source is used to allow an external signal to drive the TM as an external clock source for event counting.

TM Interrupts

The Compact Type, Standard Type and Periodic Type TMs each have two internal interrupts, one for each of the internal comparator A or comparator P, which generate a TM interrupt when a compare match condition occurs. When a TM interrupt is generated it can be used to clear the counter and also to change the state of the TM output pin.

TM External Pins

Each of the CTM or PTM, irrespective of what type, has one TM input pin, with the label xTCK. The xTM input pin, xTCK, is essentially a clock source for the xTM and is selected using the xTCK2~xTCK0 bits in the xTMC0 register. This external TM input pin allows an external clock source to drive the internal TM. The xTCK input pin can be chosen to have either a rising or falling active edge. The PTCK pin is also used as the external trigger input pin in single pulse output mode for the STM and PTM respectively.

The TMs each has one output pin, xTP. When the TM is in the Compare Match Output Mode, the pin can be controlled by the TM to switch to a high or low level or to toggle when a compare match situation occurs. The output pin is also the pin where the TM generates the PWM output waveform.

As the TM input and output pins are pin-shared with other functions, the TM input and output functions must first be setup using the relevant pin-shared function selection bits described in the Pin-shared Function section. The details of the pin-shared function selection are described in the pin-shared function section.

CTM		STM		PTM	
Input	Output	Input	Output	Input	Output
CTCK	CTP	—	STP	PTCK	PTP

TM External Pins

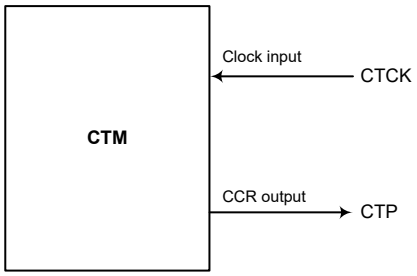

CTM Function Pin Block Diagram

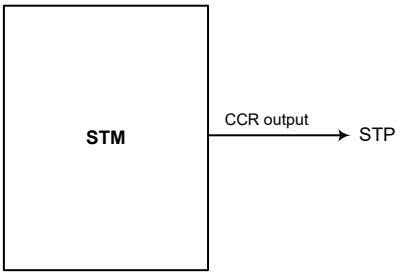

STM Function Pin Block Diagram

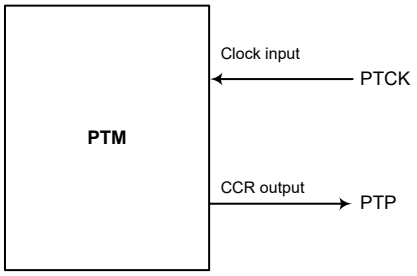

PTM Function Pin Block Diagram

Programming Considerations

The TM Counter Registers and the Compare CCRA and CCRP registers, all have a low and high byte structure. The high bytes can be directly accessed, but as the low bytes can only be accessed via an internal 8-bit buffer, reading or writing to these register pairs must be carried out in a specific way. The important point to note is that data transfer to and from the 8-bit buffer and its related low byte only takes place when a write or read operation to its corresponding high byte is executed.

As the CCRA and CCRP registers are implemented in the way shown in the following diagram and accessing these register pairs is carried out in a specific way as described above, it is recommended to use the "MOV" instruction to access the CCRA and CCRP low byte registers, named xTMAL and PTMRPL, using the following access procedures. Accessing the CCRA or CCRP low byte registers without following these access procedures will result in unpredictable values.

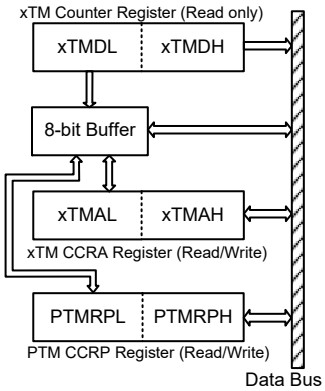

The following steps show the read and write procedures:

- Writing Data to CCRA or CCRP
  - Step 1. Write data to Low Byte xTMAL or PTMRPL
    - Note that here data is only written to the 8-bit buffer.
  - Step 2. Write data to High Byte xTMAH or PTMRPH
    - Here data is written directly to the high byte registers and simultaneously data is latched from the 8-bit buffer to the Low Byte registers.
- Reading Data from the Counter Registers and CCRA or CCRP
  - Step 1. Read data from the High Byte xTMDH, xTMAH or PTMRPH
    - Here data is read directly from the High Byte registers and simultaneously data is latched from the Low Byte register into the 8-bit buffer.
  - Step 2. Read data from the Low Byte xTMDL, xTMAL or PTMRPL
    - This step reads data from the 8-bit buffer.

Compact Type TM – CTM

Although the simplest form of the three TM types, the Compact TM type still contains three operating modes, which are Compare Match Output, Timer/Event Counter and PWM Output modes. The Compact TM can also be controlled with an external input pin and can drive one external output pin.

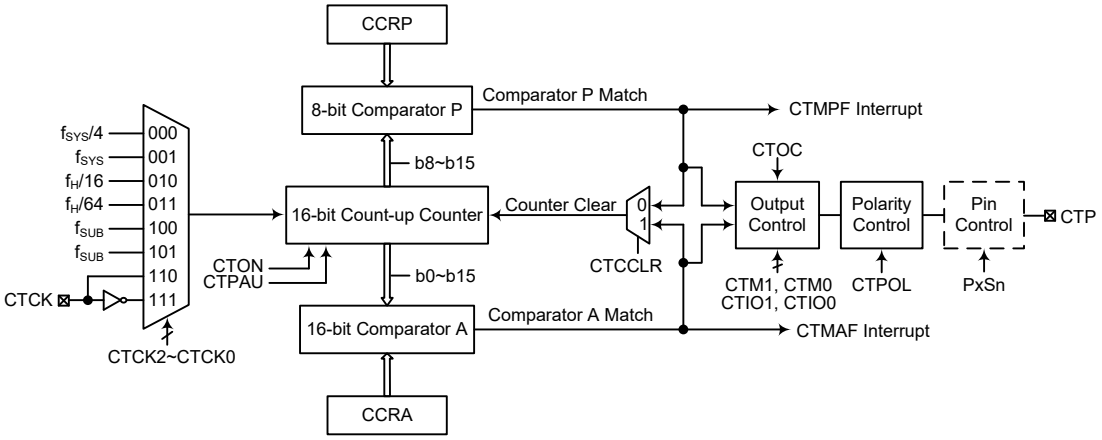

Note: the CTM external pins are pin-shared with other functions, so before using the CTM function, ensure that the pin-shared function registers have been set properly to enable the CTM pin function. The CTCK pin, if used, must also be set as an input by setting the corresponding bit in the port control register.

16-bit Compact Type TM Block Diagram

Compact Type TM Operation

At its core is a 16-bit count-up counter which is driven by a user selectable internal or external clock source. There are also two internal comparators with the names, Comparator A and Comparator P. These comparators will compare the value in the counter with CCRP and CCRA registers. The CCRP is 8-bit wide whose value is compared with the highest eight bits in the counter while the CCRA is 16-bit wide and therefore compares with all counter bits.

The only way of changing the value of the 16-bit counter using the application program, is to clear the counter by changing the CTON bit from low to high. The counter will also be cleared automatically by a counter overflow or a compare match with one of its associated comparators. When these conditions occur, a CTM interrupt signal will also usually be generated. The Compact Type TM can operate in a number of different operational modes, can be driven by different clock sources including an input pin and can also control the output pin. All operating setup conditions are selected using relevant internal registers.

Compact Type TM Register Description

Overall operation of the Compact TM is controlled using a series of registers. A read only register pair exists to store the internal counter 16-bit value, while a read/write register pair exists to store the internal 16-bit CCRA value. The CTMRP register is used to store the 8-bit CCRP value. The remaining two registers are control registers which setup the different operating and control modes.

Register Name	Bit							
	7	6	5	4	3	2	1	0
CTMC0	CTPAU	CTCK2	CTCK1	CTCK0	CTON	—	—	—
CTMC1	CTM1	CTM0	CTIO1	CTIO0	CTOC	CTPOL	CTDPX	CTCCLR
CTMDL	D7	D6	D5	D4	D3	D2	D1	D0
CTMDH	D15	D14	D13	D12	D11	D10	D9	D8
CTMAL	D7	D6	D5	D4	D3	D2	D1	D0
CTMAH	D15	D14	D13	D12	D11	D10	D9	D8
CTMRP	D7	D6	D5	D4	D3	D2	D1	D0

16-bit Compact TM Register List

- **CTMC0 Register**

Bit	7	6	5	4	3	2	1	0
Name	CTPAU	CTCK2	CTCK1	CTCK0	CTON	—	—	—
R/W	R/W	R/W	R/W	R/W	R/W	—	—	—
POR	0	0	0	0	0	—	—	—

Bit 7 **CTPAU**: CTM counter pause control
0: Run
1: Pause

The counter can be paused by setting this bit high. Clearing the bit to zero restores normal counter operation. When in a Pause condition the CTM will remain powered up and continue to consume power. The counter will retain its residual value when this bit changes from low to high and resume counting from this value when the bit changes to a low value again.

Bit 6~4 **CTCK2~CTCK0**: CTM counter clock selection
000: $f_{SYS}/4$
001: f_{SYS}
010: $f_H/16$
011: $f_H/64$
100: f_{SUB}
101: f_{SUB}
110: CTCK rising edge clock
111: CTCK falling edge clock

These three bits are used to select the clock source for the CTM. The external pin clock source can be chosen to be active on the rising or falling edge. The clock source f_{SYS} is the system clock, while f_H and f_{SUB} are other internal clocks, the details of which can be found in the Operating Modes and System Clocks section.

Bit 3 **CTON**: CTM counter on/off control
0: Off
1: On

This bit controls the overall on/off function of the CTM. Setting the bit high enables the counter to run while clearing the bit disables the CTM. Clearing this bit to zero will stop the counter from counting and turn off the CTM which will reduce its power consumption. When the bit changes state from low to high the internal counter value will be reset to zero, however when the bit changes from high to low, the internal counter will retain its residual value until the bit returns high again. If the CTM is in the Compare Match Output Mode or the PWM Output Mode then the CTM output pin will be reset to its initial condition, as specified by the CTOC bit, when the CTON bit changes from low to high.

Bit 2~0 Unimplemented, read as “0”

• **CTMC1 Register**

Bit	7	6	5	4	3	2	1	0
Name	CTM1	CTM0	CTIO1	CTIO0	CTOC	CTPOL	CTDPX	CTCCLR
R/W	R/W	R/W	R/W	R/W	R/W	R/W	R/W	R/W
POR	0	0	0	0	0	0	0	0

Bit 7~6 **CTM1~CTM0**: CTM operating mode selection
00: Compare Match Output Mode
01: Undefined
10: PWM Output Mode
11: Timer/Counter Mode

These bits set the required operating mode for the CTM. To ensure reliable operation the CTM should be switched off before any changes are made to the CTM1 and CTM0 bits. In the Timer/Counter Mode, the CTM output pin state is undefined.

Bit 5~4 **CTIO1~CTIO0**: CTM external pin function selection

Compare Match Output Mode
00: No change
01: Output low
10: Output high
11: Toggle output

PWM Output Mode
00: PWM output inactive state
01: PWM output active state
10: PWM output
11: Undefined

Timer/Counter Mode
Unused

These two bits are used to determine how the CTM external pins change state when a certain condition is reached. The function that these bits select depends upon in which mode the CTM is running.

In the Compare Match Output Mode, the CTIO1 and CTIO0 bits determine how the CTM output pin changes state when a compare match occurs from the Comparator A. The CTM output pin can be set to switch high, switch low or to toggle its present state when a compare match occurs from the Comparator A. When the bits are both zero, then no change will take place on the output. The initial value of the CTM output pin should be configured using the CTOC bit in the CTMC1 register. Note that the output level requested by the CTIO1 and CTIO0 bits must be different from the initial value setup using the CTOC bit otherwise no change will occur on the CTM output pin when a compare match occurs. After the CTM output pin changes state, it can be reset to its initial level by changing the level of the CTON bit from low to high.

In the PWM Output Mode, the CTIO1 and CTIO0 bits determine how the CTM output pin changes state when a certain compare match condition occurs. The PWM output function is modified by changing these two bits. It is necessary to only change the values of the CTIO1 and CTIO0 bits only after the CTM has been switched off. Unpredictable PWM outputs will occur if the CTIO1 and CTIO0 bits are changed when the CTM is running.

Bit 3 **CTOC**: CTM CTP output control

Compare Match Output Mode
0: Initial low
1: Initial high

PWM Output Mode
0: Active low
1: Active high

This is the output control bit for the CTM output pin. Its operation depends upon whether CTM is being used in the Compare Match Output Mode or in the PWM Output Mode. It has no effect if the CTM is in the Timer/Counter Mode. In the Compare Match Output Mode it determines the logic level of the CTM output pin before a compare match occurs. In the PWM Output Mode it determines if the PWM signal is active high or active low.

Bit 2 **CTPOL**: CTM CTP output polarity control
0: Non-invert
1: Invert

This bit controls the polarity of the CTP output pin. When the bit is set high the CTM output pin will be inverted and not inverted when the bit is zero. It has no effect if the CTM is in the Timer/Counter Mode.

Bit 1 **CTDPX**: CTM PWM duty/period control
0: CCRP – period; CCRA – duty
1: CCRP – duty; CCRA – period

This bit determines which of the CCRA and CCRP registers are used for period and duty control of the PWM waveform.

Bit 0 **CTCCLR**: CTM counter clear condition selection
0: CTM Comparator P match
1: CTM Comparator A match

This bit is used to select the method which clears the counter. Remember that the Compact TM contains two comparators, Comparator A and Comparator P, either of which can be selected to clear the internal counter. With the CTCCLR bit set high, the counter will be cleared when a compare match occurs from the Comparator A. When the bit is low, the counter will be cleared when a compare match occurs from the Comparator P or with a counter overflow. A counter overflow clearing method can only be implemented if the CCRP bits are all cleared to zero. The CTCCLR bit is not used in the PWM Output Mode.

- **CTMDL Register**

Bit	7	6	5	4	3	2	1	0
Name	D7	D6	D5	D4	D3	D2	D1	D0
R/W	R	R	R	R	R	R	R	R
POR	0	0	0	0	0	0	0	0

Bit 7~0 **D7~D0**: CTM Counter Low Byte Register bit 7 ~ bit 0
CTM 16-bit Counter bit 7 ~ bit 0

- **CTMDH Register**

Bit	7	6	5	4	3	2	1	0
Name	D15	D14	D13	D12	D11	D10	D9	D8
R/W	R	R	R	R	R	R	R	R
POR	0	0	0	0	0	0	0	0

Bit 7~0 **D15~D8**: CTM Counter High Byte Register bit 7 ~ bit 0
CTM 16-bit Counter bit 15 ~ bit 8

• **CTMAL Register**

Bit	7	6	5	4	3	2	1	0
Name	D7	D6	D5	D4	D3	D2	D1	D0
R/W	R/W	R/W	R/W	R/W	R/W	R/W	R/W	R/W
POR	0	0	0	0	0	0	0	0

Bit 7~0 **D7~D0**: CTM CCRA Low Byte Register bit 7 ~ bit 0
CTM 16-bit CCRA bit 7 ~ bit 0

• **CTMAH Register**

Bit	7	6	5	4	3	2	1	0
Name	D15	D14	D13	D12	D11	D10	D9	D8
R/W	R/W	R/W	R/W	R/W	R/W	R/W	R/W	R/W
POR	0	0	0	0	0	0	0	0

Bit 7~0 **D15~D8**: CTM CCRA High Byte Register bit 7 ~ bit 0
CTM 16-bit CCRA bit 15 ~ bit 8

• **CTMRP Register**

Bit	7	6	5	4	3	2	1	0
Name	D7	D6	D5	D4	D3	D2	D1	D0
R/W	R/W	R/W	R/W	R/W	R/W	R/W	R/W	R/W
POR	0	0	0	0	0	0	0	0

Bit 7~0 **D7~D0**: CTM CCRP 8-bit register, compared with the CTM Counter bit 15 ~ bit 8
Comparator P Match Period=
0: 65536 CTM clocks
1~255: 256 × (1~255) CTM clocks

These eight bits are used to setup the value on the internal CCRP 8-bit register, which are then compared with the internal counter's highest eight bits. The result of this comparison can be selected to clear the internal counter if the CTCCLR bit is set to zero. Setting the CTCCLR bit to zero ensures that a compare match with the CCRP values will reset the internal counter. As the CCRP bits are only compared with the highest eight counter bits, the compare values exist in 256 clock cycle multiples. Clearing all eight bits to zero is in effect allowing the counter to overflow at its maximum value.

Compact Type TM Operating Modes

The Compact Type TM can operate in one of three operating modes, Compare Match Output Mode, PWM Output Mode or Timer/Counter Mode. The operating mode is selected using the CTM1 and CTM0 bits in the CTMC1 register.

Compare Match Output Mode

To select this mode, bits CTM1 and CTM0 in the CTMC1 register, should be set to “00” respectively. In this mode once the counter is enabled and running it can be cleared by three methods. These are a counter overflow, a compare match from Comparator A and a compare match from Comparator P. When the CTCCLR bit is low, there are two ways in which the counter can be cleared. One is when a compare match occurs from Comparator P, the other is when the CCRP bits are all zero which allows the counter to overflow. Here both CTMAF and CTMPF interrupt request flags for the Comparator A and Comparator P respectively, will both be generated.

If the CTCCLR bit in the CTMC1 register is high then the counter will be cleared when a compare match occurs from Comparator A. However, here only the CTMAF interrupt request flag will be generated even if the value of the CCRP bits is less than that of the CCRA registers. Therefore when CTCCLR is high no CTMPF interrupt request flag will be generated. If the CCRA bits are all zero, the counter will overflow when it reaches its maximum 16-bit, FFFF Hex, value, however here the CTMAF interrupt request flag will not be generated.

As the name of the mode suggests, after a comparison is made, the CTM output pin will change state. The CTM output pin condition however only changes state when a CTMAF interrupt request flag is generated after a compare match occurs from Comparator A. The CTMPF interrupt request flag, generated from a compare match occurs from Comparator P, will have no effect on the CTM output pin. The way in which the CTM output pin changes state are determined by the condition of the CTIO1 and CTIO0 bits in the CTMC1 register. The CTM output pin can be selected using the CTIO1 and CTIO0 bits to go high, to go low or to toggle from its present condition when a compare match occurs from Comparator A. The initial condition of the CTM output pin, which is setup after the CTON bit changes from low to high, is setup using the CTOC bit. Note that if the CTIO1 and CTIO0 bits are zero then no pin change will take place.

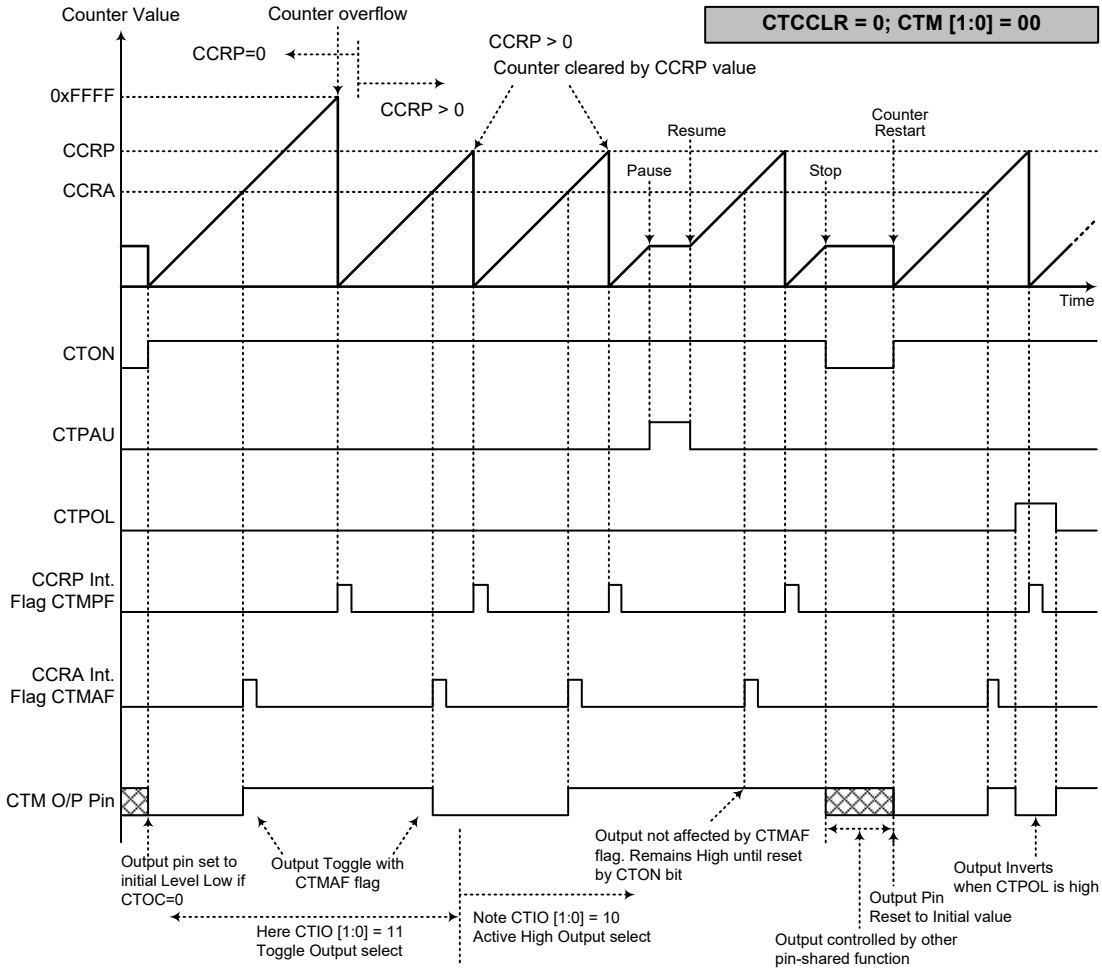

Compare Match Output Mode – CTCCLR=0

Note: 1. With CTCCLR=0, a Comparator P match will clear the counter

2. The CTM output pin is controlled only by the CTMAF flag

3. The output pin is reset to its initial state by a CTON bit rising edge

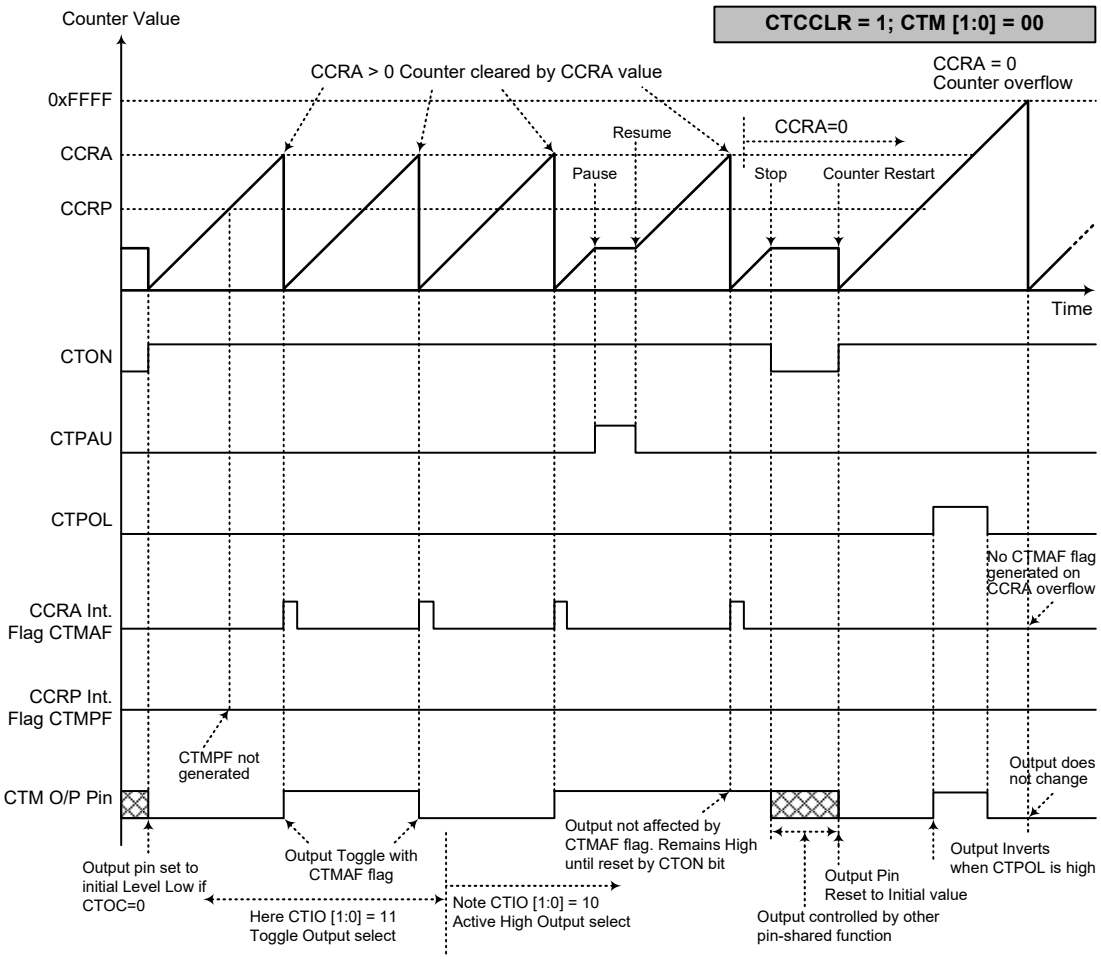

Compare Match Output Mode – CTCCLR=1

Note: 1. With CTCCLR=1, a Comparator A match will clear the counter

2. The CTM output pin is controlled only by the CTMAF flag

3. The output pin is reset to its initial state by a CTON bit rising edge

4. The CTMPF flag is not generated when CTCCLR=1

Timer/Counter Mode

To select this mode, bits CTM1 and CTM0 in the CTMC1 register should be set to “11” respectively. The Timer/Counter Mode operates in an identical way to the Compare Match Output Mode generating the same interrupt flags. The exception is that in the Timer/Counter Mode the CTM output pin is not used. Therefore the above description and Timing Diagrams for the Compare Match Output Mode can be used to understand its function. As the CTM output pin is not used in this mode, the pin can be used as a normal I/O pin or other pin-shared functions.

PWM Output Mode

To select this mode, bits CTM1 and CTM0 in the CTMC1 register should be set to “10” respectively. The PWM function within the CTM is useful for applications which require functions such as motor control, heating control, illumination control etc. By providing a signal of fixed frequency but of varying duty cycle on the CTM output pin, a square wave AC waveform can be generated with varying equivalent DC RMS values.

As both the period and duty cycle of the PWM waveform can be controlled, the choice of generated waveform is extremely flexible. In the PWM Output Mode, the CTCCLR bit has no effect on the PWM operation. Both of the CCRA and CCRP registers are used to generate the PWM waveform, one register is used to clear the internal counter and thus control the PWM waveform frequency, while the other one is used to control the duty cycle. Which register is used to control either frequency or duty cycle is determined using the CTDPX bit in the CTMC1 register. The PWM waveform frequency and duty cycle can therefore be controlled by the values in the CCRA and CCRP registers.

An interrupt flag, one for each of the CCRA and CCRP, will be generated when a compare match occurs from either Comparator A or Comparator P. The CTOC bit in the CTMC1 register is used to select the required polarity of the PWM waveform while the two CTIO1 and CTIO0 bits are used to enable the PWM output or to force the CTM output pin to a fixed high or low level. The CTPOL bit is used to reverse the polarity of the PWM output waveform.

- **16-bit CTM, PWM Output Mode, Edge-aligned Mode, CTDPX=0**

CCRP	1~255	0
Period	CCRP×256	65536
Duty	CCRA	

If f_{SYS}=16MHz, CTM clock source is $f_{SYS}/4$, CCRP=2, CCRA=128,

The CTM PWM output frequency=$(f_{SYS}/4)/512=f_{SYS}/2048$=7.8125kHz, duty=128/512=25%,

If the Duty value defined by the CCRA register is equal to or greater than the Period value, then the PWM output duty is 100%.

- **16-bit CTM, PWM Output Mode, Edge-aligned Mode, CTDPX=1**

CCRP	1~255	0
Period	CCRA	
Duty	CCRP×256	65536

The PWM output period is determined by the CCRA register value together with the CTM clock while the PWM duty cycle is defined by the CCRP register value.

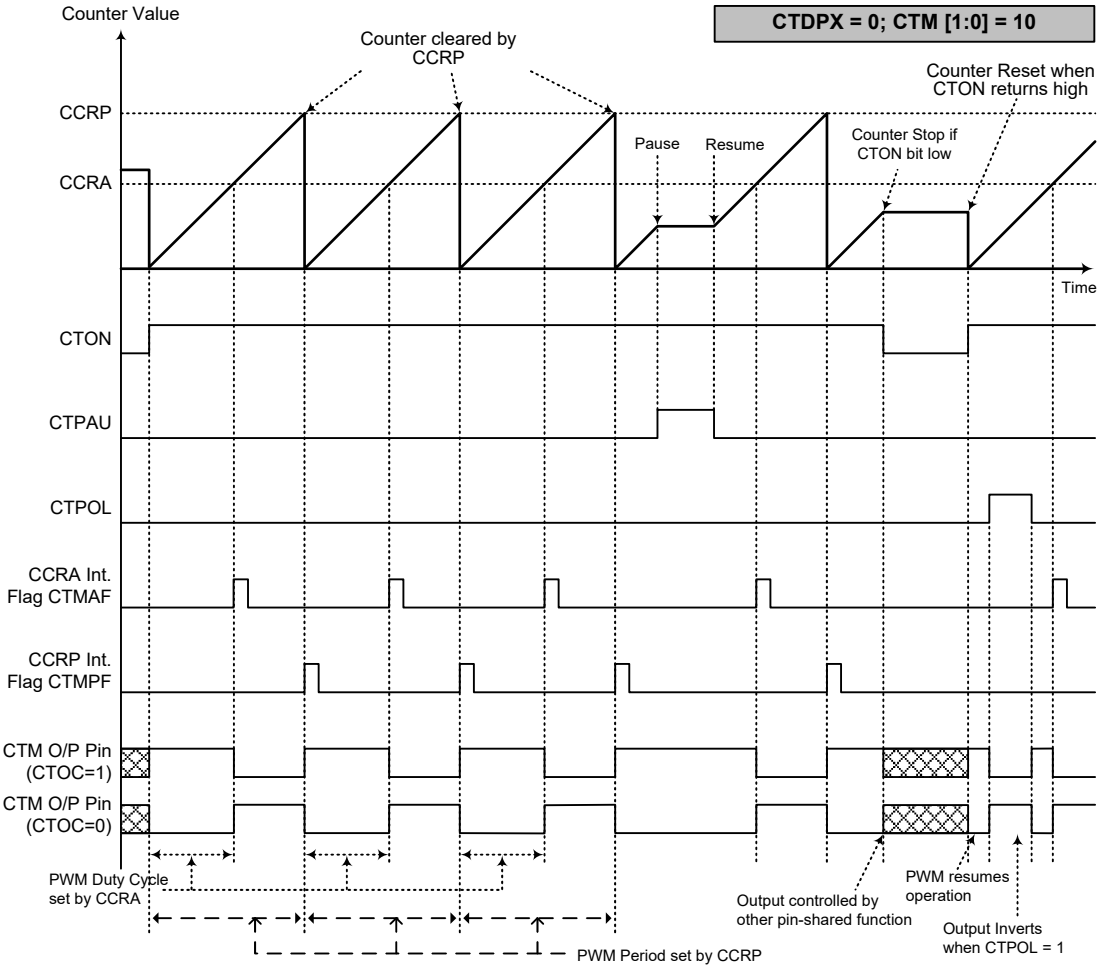

PWM Output Mode – CTDPX=0

Note: 1. Here CTDPX=0 – Counter cleared by CCRP

2. A counter clear sets the PWM Period

3. The internal PWM function continues even when CTIO[1:0]=00 or 01

4. The CTCCLR bit has no influence on PWM operation

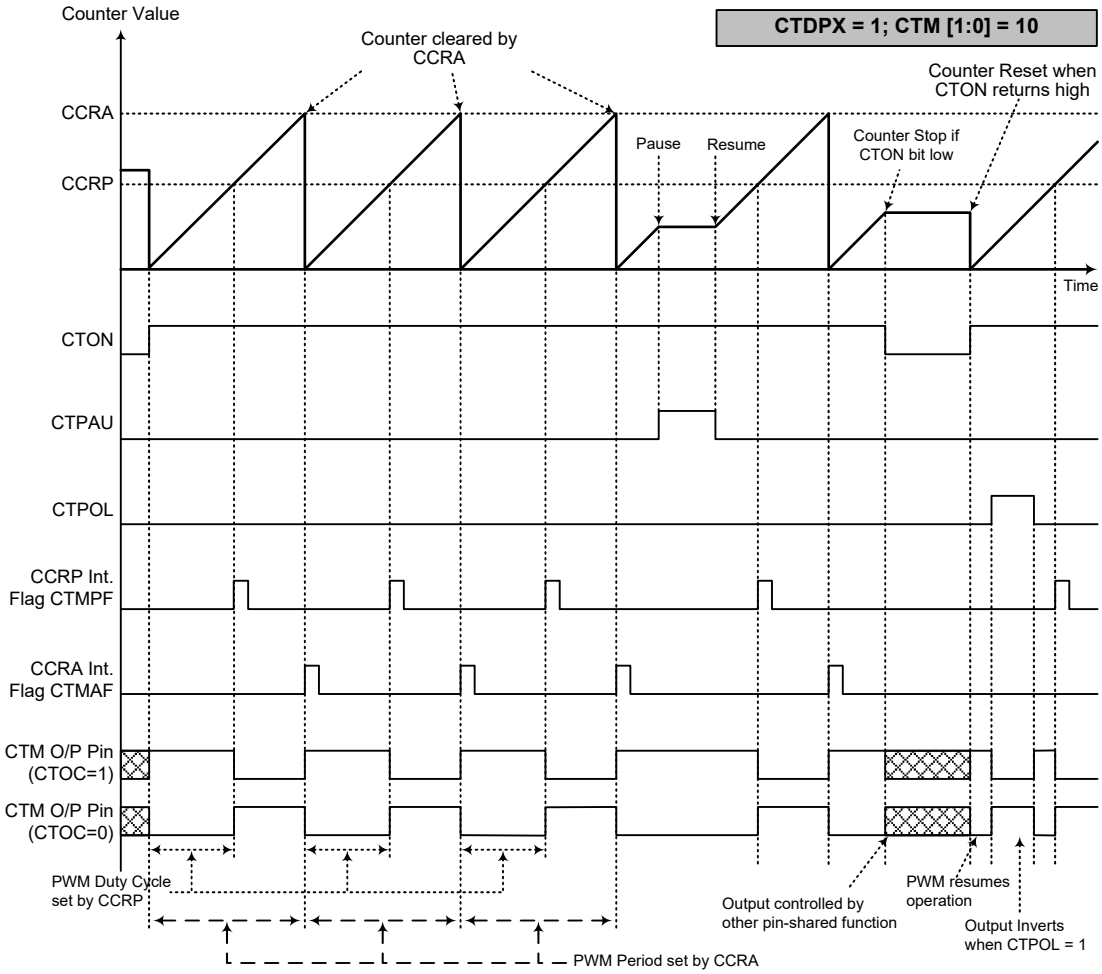

PWM Output Mode – CTDPX=1

Note: 1. Here CTDPX=1 – Counter cleared by CCRA

2. A counter clear sets the PWM Period

3. The internal PWM function continues even when CTIO[1:0]=00 or 01

4. The CTCCLR bit has no influence on PWM operation

Standard Type TM – STM

The Standard Type TM contains four operating modes, which are Compare Match Output, Timer/Event Counter, Single Pulse Output and PWM Output modes.

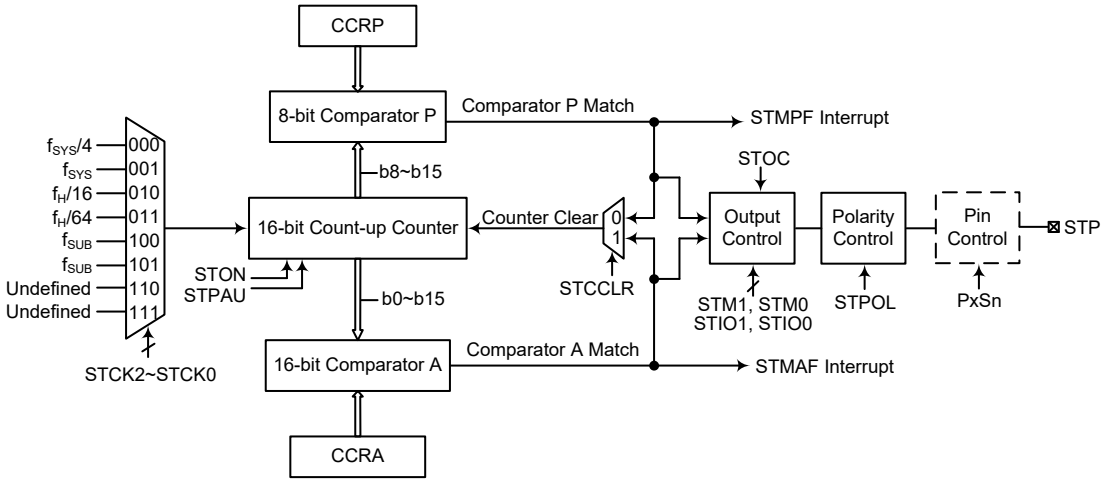

Note: 1. There is no external clock input for the STM.

2. The STM external pin is pin-shared with other functions, so before using the STM function, ensure that the pin-shared function registers have been set properly to enable the STM pin function.

16-bit Standard Type TM Block Diagram

Standard Type TM Operation

The size of Standard TM is 16-bit wide and its core is a 16-bit count-up counter which is driven by a user selectable internal or external clock source. There are also two internal comparators with the names, Comparator A and Comparator P. These comparators will compare the value in the counter with CCRP and CCRA registers. The CCRP comparator is 8-bit wide whose value is compared with the highest 8 bits in the counter while the CCRA is the sixteen bits and therefore compares all counter bits.

The only way of changing the value of the 16-bit counter using the application program, is to clear the counter by changing the STON bit from low to high. The counter will also be cleared automatically by a counter overflow or a compare match with one of its associated comparators. When these conditions occur, a STM interrupt signal will also usually be generated. The Standard Type TM can operate in a number of different operational modes, can be driven by different clock sources and can also control the output pin. All operating setup conditions are selected using relevant internal registers.

Standard Type TM Register Description

Overall operation of the Standard TM is controlled using a series of registers. A read only register pair exists to store the internal counter 16-bit value, while a read/write register pair exists to store the internal 16-bit CCRA value. The STMRP register is used to store the 8-bit CCRP value. The remaining two registers are control registers which setup the different operating and control modes.

Register Name	Bit							
	7	6	5	4	3	2	1	0
STMC0	STPAU	STCK2	STCK1	STCK0	STON	—	—	—
STMC1	STM1	STM0	STIO1	STIO0	STOC	STPOL	STDPX	STCCLR
STMDL	D7	D6	D5	D4	D3	D2	D1	D0
STMDH	D15	D14	D13	D12	D11	D10	D9	D8
STMAL	D7	D6	D5	D4	D3	D2	D1	D0
STMAH	D15	D14	D13	D12	D11	D10	D9	D8
STMRP	STRP7	STRP6	STRP5	STRP4	STRP3	STRP2	STRP1	STRP0

16-bit Standard TM Register List

- **STMC0 Register**

Bit	7	6	5	4	3	2	1	0
Name	STPAU	STCK2	STCK1	STCK0	STON	—	—	—
R/W	R/W	R/W	R/W	R/W	R/W	—	—	—
POR	0	0	0	0	0	—	—	—

Bit 7 **STPAU**: STM counter pause control
0: Run
1: Pause

The counter can be paused by setting this bit high. Clearing the bit to zero restores normal counter operation. When in a Pause condition the STM will remain powered up and continue to consume power. The counter will retain its residual value when this bit changes from low to high and resume counting from this value when the bit changes to a low value again.

Bit 6~4 **STCK2~STCK0**: STM counter clock selection
000: $f_{SYS}/4$
001: f_{SYS}
010: $f_H/16$
011: $f_H/64$
100: f_{SUB}
101: f_{SUB}
110: Undefined
111: Undefined

These three bits are used to select the clock source for the STM. The clock source f_{SYS} is the system clock, while f_H and f_{SUB} are other internal clocks, the details of which can be found in the Operating Modes and System Clocks section.

Bit 3 **STON**: STM counter on/off control
0: Off
1: On

This bit controls the overall on/off function of the STM. Setting the bit high enables the counter to run while clearing the bit disables the STM. Clearing this bit to zero will stop the counter from counting and turn off the STM which will reduce its power consumption. When the bit changes state from low to high the internal counter value will be reset to zero, however when the bit changes from high to low, the internal counter will retain its residual value until the bit returns high again.

If the STM is in the Compare Match Output Mode or PWM output Mode or Single Pulse Output Mode, then the STM output pin will be reset to its initial condition, as specified by the STOC bit, when the STON bit changes from low to high.

Bit 2~0 Unimplemented, read as “0”

• **STMC1 Register**

Bit	7	6	5	4	3	2	1	0
Name	STM1	STM0	STIO1	STIO0	STOC	STPOL	STDPX	STCCLR
R/W	R/W	R/W	R/W	R/W	R/W	R/W	R/W	R/W
POR	0	0	0	0	0	0	0	0

Bit 7~6 **STM1~STM0**: STM operating mode selection
00: Compare Match Output Mode
01: Undefined
10: PWM Output Mode or Single Pulse Output Mode
11: Timer/Counter Mode

These bits setup the required operating mode for the STM. To ensure reliable operation the STM should be switched off before any changes are made to the STM1 and STM0 bits. In the Timer/Counter Mode, the STM output pin state is undefined.

Bit 5~4 **STIO1~STIO0**: Select STM external pin function

Compare Match Output Mode
00: No change
01: Output low
10: Output high
11: Toggle output

PWM Output Mode/Single Pulse Output Mode
00: PWM output inactive state
01: PWM output active state
10: PWM output
11: Single Pulse Output

Timer/Counter Mode
Unused

These two bits are used to determine how the STM external pins change state when a certain condition is reached. The function that these bits select depends upon in which mode the STM is running.

In the Compare Match Output Mode, the STIO1 and STIO0 bits determine how the STM output pin changes state when a compare match occurs from the Comparator A. The TM output pin can be setup to switch high, switch low or to toggle its present state when a compare match occurs from the Comparator A. When the bits are both zero, then no change will take place on the output. The initial value of the STM output pin should be setup using the STOC bit in the STMC1 register. Note that the output level requested by the STIO1 and STIO0 bits must be different from the initial value setup using the STOC bit otherwise no change will occur on the STM output pin when a compare match occurs. After the STM output pin changes state, it can be reset to its initial level by changing the level of the STON bit from low to high.

In the PWM Output Mode, the STIO1 and STIO0 bits determine how the STM output pin changes state when a certain compare match condition occurs. The PWM output function is modified by changing these two bits. It is necessary to only change the values of the STIO1 and STIO0 bits only after the STM has been switched off. Unpredictable PWM outputs will occur if the STIO1 and STIO0 bits are changed when the STM is running.

Bit 3 **STOC**: STM STP output control

Compare Match Output Mode
0: Initial low
1: Initial high

PWM Output Mode/Single Pulse Output Mode
0: Active low
1: Active high

This is the output control bit for the STM output pin. Its operation depends upon whether STM is being used in the Compare Match Output Mode or in the PWM Output Mode/Single Pulse Output Mode. It has no effect if the STM is in the Timer/Counter Mode. In the Compare Match Output Mode it determines the logic level of the STM output pin before a compare match occurs. In the PWM Output Mode it determines if the PWM signal is active high or active low. In the Single Pulse Output Mode it determines the logic level of the STM output pin when the STON bit changes from low to high.

Bit 2 **STPOL**: STM STP output polarity control
0: Non-invert
1: Invert

This bit controls the polarity of the STP output pin. When the bit is set high the STM output pin will be inverted and not inverted when the bit is zero. It has no effect if the STM is in the Timer/Counter Mode.

Bit 1 **STDPX**: STM PWM duty/period control
0: CCRP – period; CCRA – duty
1: CCRP – duty; CCRA – period

This bit determines which of the CCRA and CCRP registers are used for period and duty control of the PWM waveform.

Bit 0 **STCCLR**: STM counter clear condition selection
0: Comparator P match
1: Comparator A match

This bit is used to select the method which clears the counter. Remember that the Standard TM contains two comparators, Comparator A and Comparator P, either of which can be selected to clear the internal counter. With the STCCLR bit set high, the counter will be cleared when a compare match occurs from the Comparator A. When the bit is low, the counter will be cleared when a compare match occurs from the Comparator P or with a counter overflow. A counter overflow clearing method can only be implemented if the CCRP bits are all cleared to zero. The STCCLR bit is not used in the PWM Output Mode or Single Pulse Output Mode.

• STMDL Register

Bit	7	6	5	4	3	2	1	0
Name	D7	D6	D5	D4	D3	D2	D1	D0
R/W	R	R	R	R	R	R	R	R
POR	0	0	0	0	0	0	0	0

Bit 7~0 **D7~D0**: STM Counter Low Byte Register bit 7 ~ bit 0
STM 16-bit Counter bit 7 ~ bit 0

• STMDH Register

Bit	7	6	5	4	3	2	1	0
Name	D15	D14	D13	D12	D11	D10	D9	D8
R/W	R	R	R	R	R	R	R	R
POR	0	0	0	0	0	0	0	0

Bit 7~0 **D15~D8**: STM Counter High Byte Register bit 7 ~ bit 0
STM 16-bit Counter bit 15 ~ bit 8

• **STMAL Register**

Bit	7	6	5	4	3	2	1	0
Name	D7	D6	D5	D4	D3	D2	D1	D0
R/W	R/W	R/W	R/W	R/W	R/W	R/W	R/W	R/W
POR	0	0	0	0	0	0	0	0

Bit 7~0 **D7~D0**: STM CCRA Low Byte Register bit 7 ~ bit 0
STM 16-bit CCRA bit 7 ~ bit 0

• **STMAH Register**

Bit	7	6	5	4	3	2	1	0
Name	D15	D14	D13	D12	D11	D10	D9	D8
R/W	R/W	R/W	R/W	R/W	R/W	R/W	R/W	R/W
POR	0	0	0	0	0	0	0	0

Bit 7~0 **D15~D8**: STM CCRA High Byte Register bit 7 ~ bit 0
STM 16-bit CCRA bit 15 ~ bit 8

• **STMRP Register**

Bit	7	6	5	4	3	2	1	0
Name	STRP7	STRP6	STRP5	STRP4	STRP3	STRP2	STRP1	STRP0
R/W	R/W	R/W	R/W	R/W	R/W	R/W	R/W	R/W
POR	0	0	0	0	0	0	0	0

Bit 7~0 **STRP7~STRP0**: STM CCRP 8-bit register, compared with the STM counter bit 15 ~ bit 8

Comparator P match period=
0: 65536 STM clocks
1~255: (1~255)×256 STM clocks

These eight bits are used to setup the value on the internal CCRP 8-bit register, which are then compared with the internal counter's highest eight bits. The result of this comparison can be selected to clear the internal counter if the STCCLR bit is set to zero. Setting the STCCLR bit to zero ensures that a compare match with the CCRP values will reset the internal counter. As the CCRP bits are only compared with the highest eight counter bits, the compare values exist in 256 clock cycle multiples. Clearing all eight bits to zero is in effect allowing the counter to overflow at its maximum value.

Standard Type TM Operation Modes

The Standard Type TM can operate in one of four operating modes, Compare Match Output Mode, PWM Output Mode, Single Pulse Output Mode or Timer/Counter Mode. The operating mode is selected using the STM1 and STM0 bits in the STMC1 register.

Compare Match Output Mode

To select this mode, bits STM1 and STM0 in the STMC1 register, should be set to “00” respectively. In this mode once the counter is enabled and running it can be cleared by three methods. These are a counter overflow, a compare match from Comparator A and a compare match from Comparator P. When the STCCLR bit is low, there are two ways in which the counter can be cleared. One is when a compare match from Comparator P, the other is when the CCRP bits are all zero which allows the counter to overflow. Here both STMAF and STMPF interrupt request flags for Comparator A and Comparator P respectively, will both be generated.

If the STCCLR bit in the STMC1 register is high then the counter will be cleared when a compare match occurs from Comparator A. However, here only the STMAF interrupt request flag will be generated even if the value of the CCRP bits is less than that of the CCRA registers. Therefore when STCCLR is high no STMPF interrupt request flag will be generated. In the Compare Match Output Mode, the CCRA can not be set to “0”.

If the CCRA bits are all zero, the counter will overflow when it reaches its maximum 16-bit, FFFF Hex, value, however here the STMAF interrupt request flag will not be generated.

As the name of the mode suggests, after a comparison is made, the STM output pin, will change state. The STM output pin condition however only changes state when a STMAF interrupt request flag is generated after a compare match occurs from Comparator A. The STMPF interrupt request flag, generated from a compare match occurs from Comparator P, will have no effect on the STM output pin. The way in which the STM output pin changes state are determined by the condition of the STIO1 and STIO0 bits in the STMC1 register. The STM output pin can be selected using the STIO1 and STIO0 bits to go high, to go low or to toggle from its present condition when a compare match occurs from Comparator A. The initial condition of the STM output pin, which is setup after the STON bit changes from low to high, is setup using the STOC bit. Note that if the STIO1 and STIO0 bits are zero then no pin change will take place.

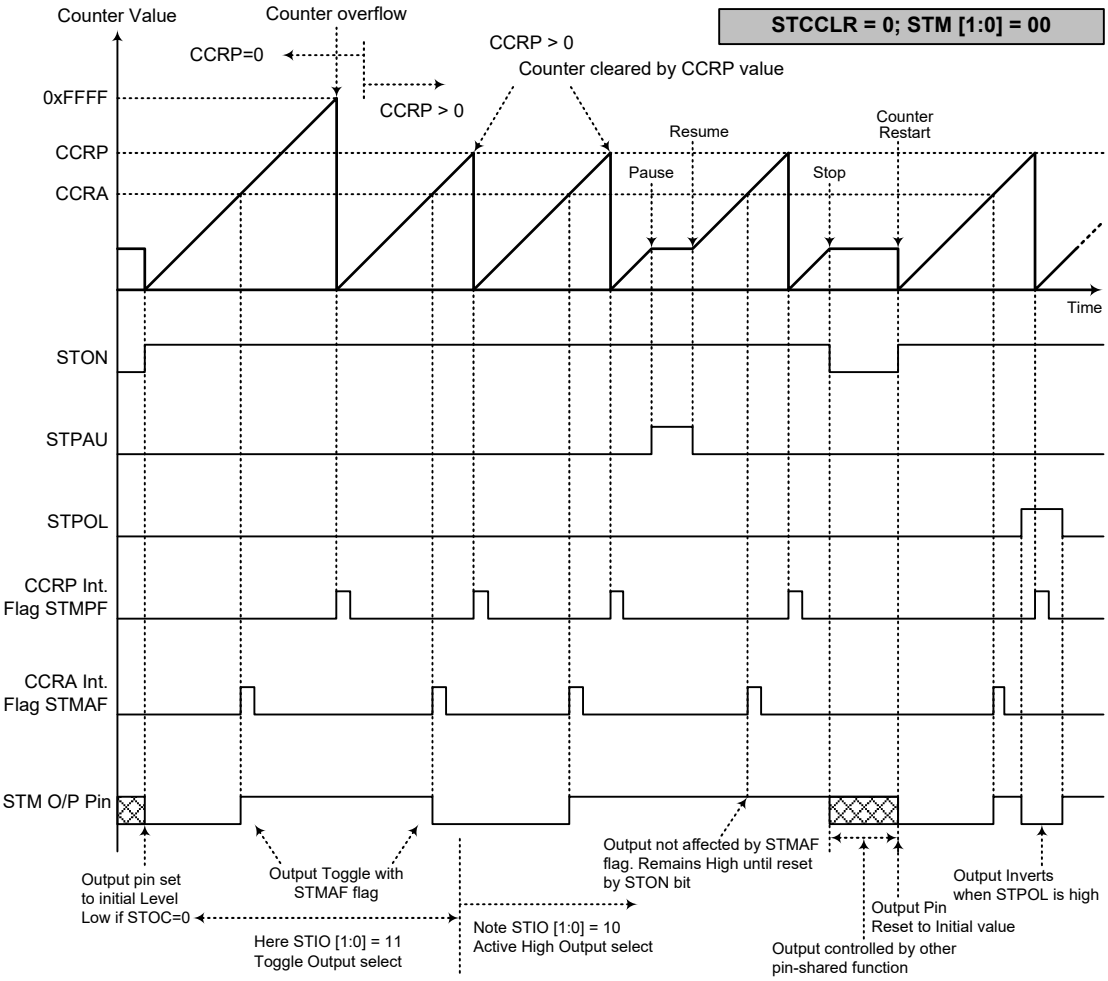

Compare Match Output Mode – STCCLR=0

Note: 1. With STCCLR=0, a Comparator P match will clear the counter

2. The STM output pin is controlled only by the STMAF flag

3. The output pin is reset to its initial state by a STON bit rising edge

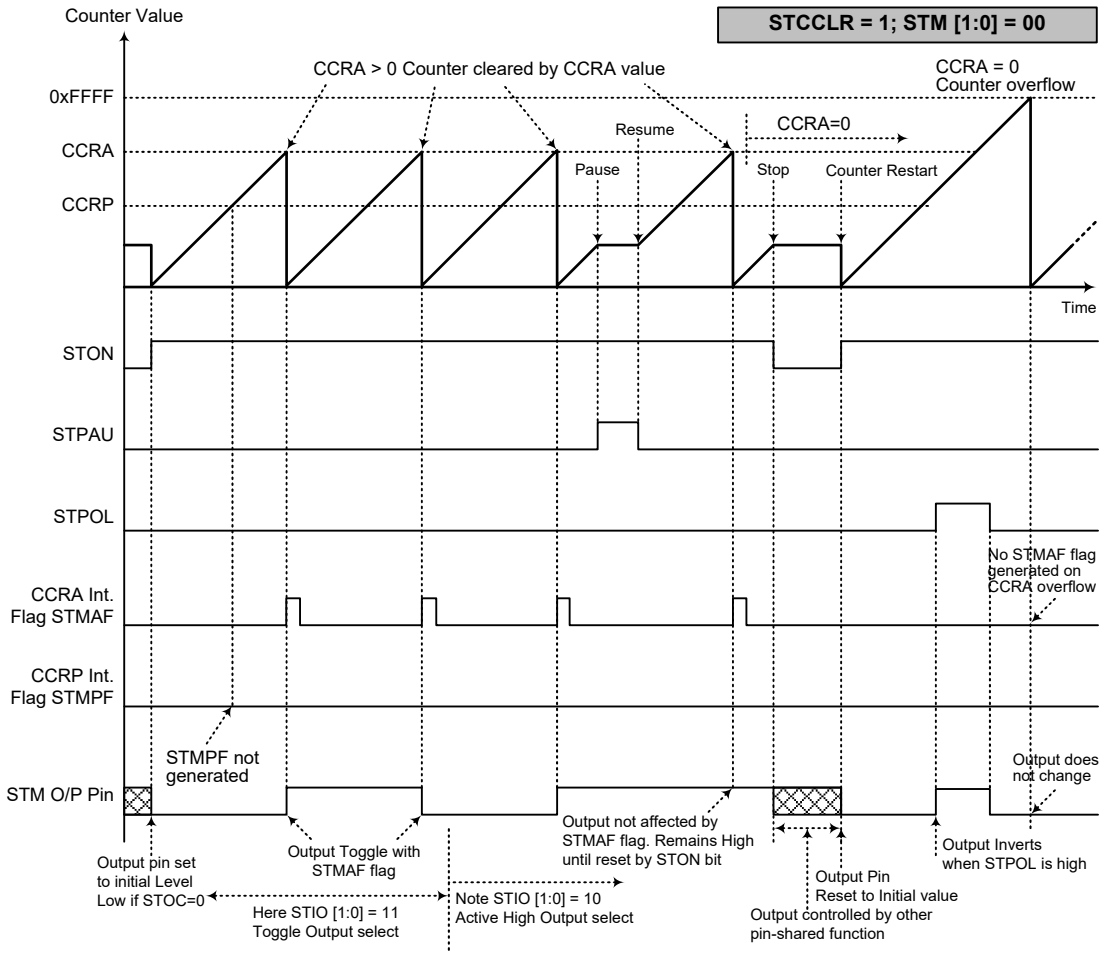

Compare Match Output Mode – STCCLR=1

Note: 1. With STCCLR=1, a Comparator A match will clear the counter

2. The STM output pin is controlled only by the STMAF flag

3. The output pin is reset to its initial state by a STON bit rising edge

4. The STMPF flag is not generated when STCCLR=1

Timer/Counter Mode

To select this mode, bits STM1 and STM0 in the STMC1 register should be set to "11" respectively. The Timer/Counter Mode operates in an identical way to the Compare Match Output Mode generating the same interrupt flags. The exception is that in the Timer/Counter Mode the STM output pin is not used. Therefore the above description and Timing Diagrams for the Compare Match Output Mode can be used to understand its function. As the STM output pin is not used in this mode, the pin can be used as a normal I/O pin or other pin-shared functions.

PWM Output Mode

To select this mode, bits STM1 and STM0 in the STMC1 register should be set to "10" respectively. The PWM function within the STM is useful for applications which require functions such as motor control, heating control, illumination control etc. By providing a signal of fixed frequency but of varying duty cycle on the STM output pin, a square wave AC waveform can be generated with varying equivalent DC RMS values.

As both the period and duty cycle of the PWM waveform can be controlled, the choice of generated waveform is extremely flexible. In the PWM Output Mode, the STCCLR bit has no effect as the PWM period. Both of the CCRA and CCRP registers are used to generate the PWM waveform, one register is used to clear the internal counter and thus control the PWM waveform frequency, while the other one is used to control the duty cycle. Which register is used to control either frequency or duty cycle is determined using the STDPX bit in the STMC1 register. The PWM waveform frequency and duty cycle can therefore be controlled by the values in the CCRA and CCRP registers.

An interrupt flag, one for each of the CCRA and CCRP, will be generated when a compare match occurs from either Comparator A or Comparator P. The STOC bit in the STMC1 register is used to select the required polarity of the PWM waveform while the two STIO1 and STIO0 bits are used to enable the PWM output or to force the STM output pin to a fixed high or low level. The STPOL bit is used to reverse the polarity of the PWM output waveform.

- **16-bit STM, PWM Output Mode, Edge-aligned Mode, STDPX=0**

CCRP	1~255	0
Period	CCRP×256	65536
Duty	CCRA	

If f_{SYS}=16MHz, STM clock source is $f_{SYS}/4$, CCRP=2 and CCRA=128,

The STM PWM output frequency=$(f_{SYS}/4)/(2\times256)=f_{SYS}/2048$=7.8125kHz, duty=128/(2×256)=25%,

If the Duty value defined by the CCRA register is equal to or greater than the Period value, then the PWM output duty is 100%.

- **16-bit STM, PWM Output Mode, Edge-aligned Mode, STDPX=1**

CCRP	1~255	0
Period	CCRA	
Duty	CCRP×256	65536

The PWM output period is determined by the CCRA register value together with the STM clock while the PWM duty cycle is defined by the CCRP register value except when the CCRP value is equal to 0.

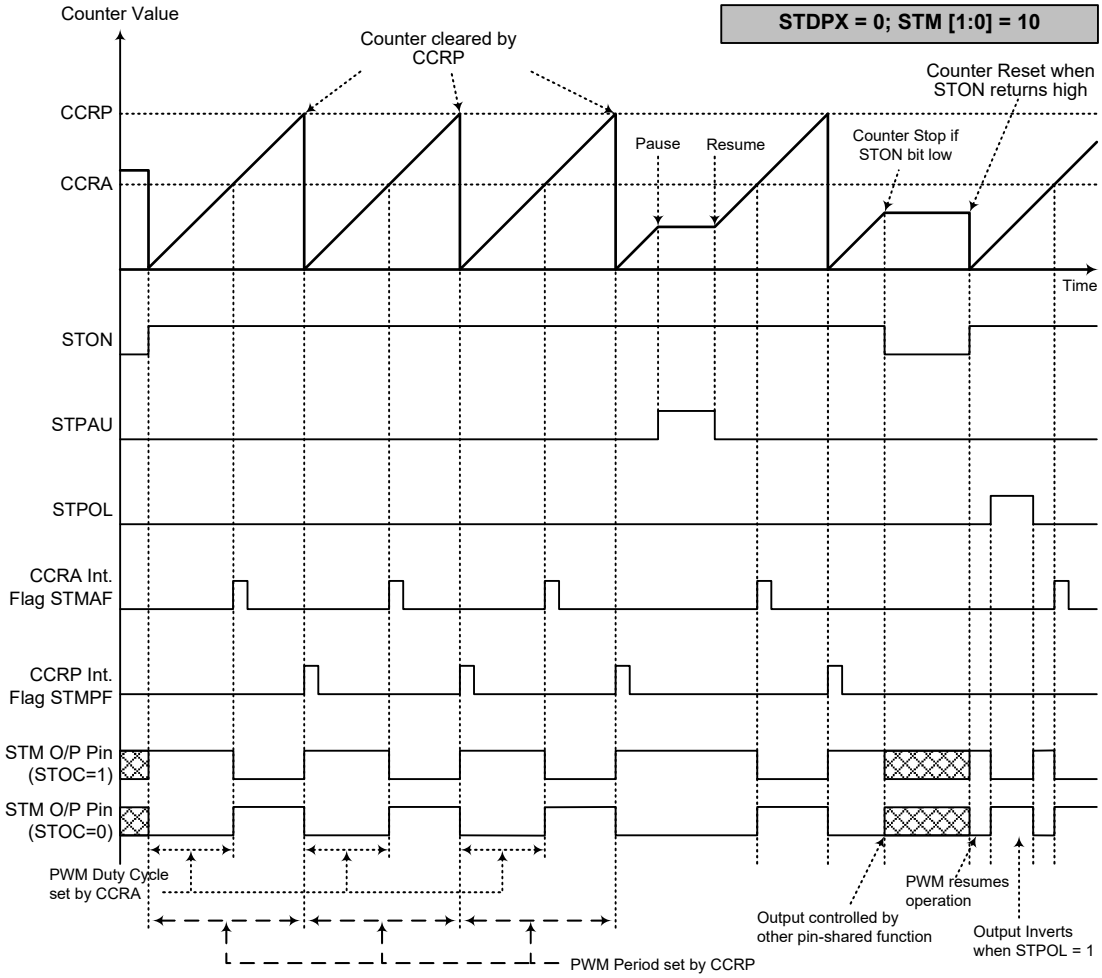

PWM Output Mode – STDPX=0

Note: 1. Here STDPX=0 – Counter cleared by CCRP

2. A counter clear sets the PWM Period

3. The internal PWM function continues even when STIO[1:0]=00 or 01

4. The STCCLR bit has no influence on PWM operation

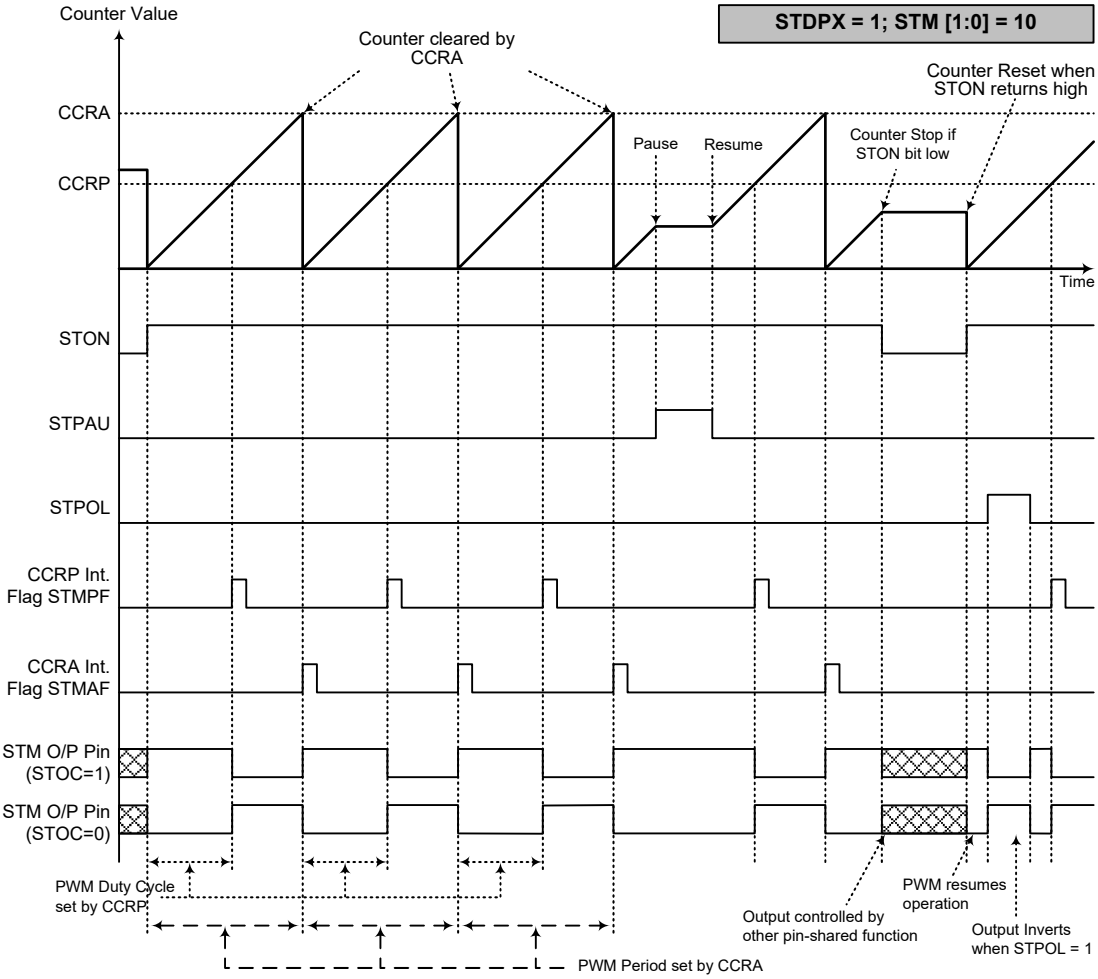

PWM Output Mode – STDPX=1

Note: 1. Here STDPX=1 – Counter cleared by CCRA

2. A counter clear sets the PWM Period

3. The internal PWM function continues even when STIO[1:0]=00 or 01

4. The STCCLR bit has no influence on PWM operation

Single Pulse Output Mode

To select this mode, bits STM1 and STM0 in the STMC1 register should be set to “10” respectively and also the STIO1 and STIO0 bits should be set to “11” respectively. The Single Pulse Output Mode, as the name suggests, will generate a single shot pulse on the STM output pin.

The trigger for the pulse output leading edge is a low to high transition of the STON bit, which can be implemented using the application program. When the STON bit transitions to a high level, the counter will start running and the pulse leading edge will be generated. The STON bit should remain high when the pulse is in its active state. The generated pulse trailing edge will be generated when the STON bit is cleared to zero, which can be implemented using the application program or when a compare match occurs from Comparator A.

However a compare match from Comparator A will also automatically clear the STON bit and thus generate the Single Pulse output trailing edge. In this way the CCRA value can be used to control the pulse width. A compare match from Comparator A will also generate a STM interrupt. The counter can only be reset back to zero when the STON bit changes from low to high when the counter restarts. In the Single Pulse Output Mode CCRP is not used. The STCCLR and STDPX bits are not used in this Mode.

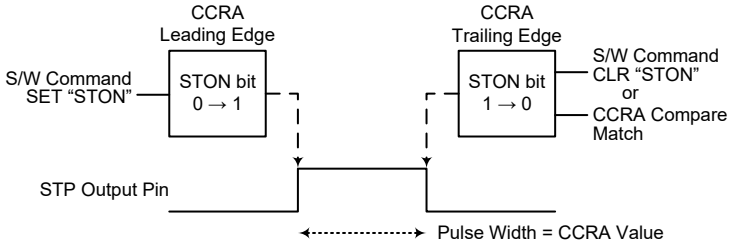

Single Pulse Generation

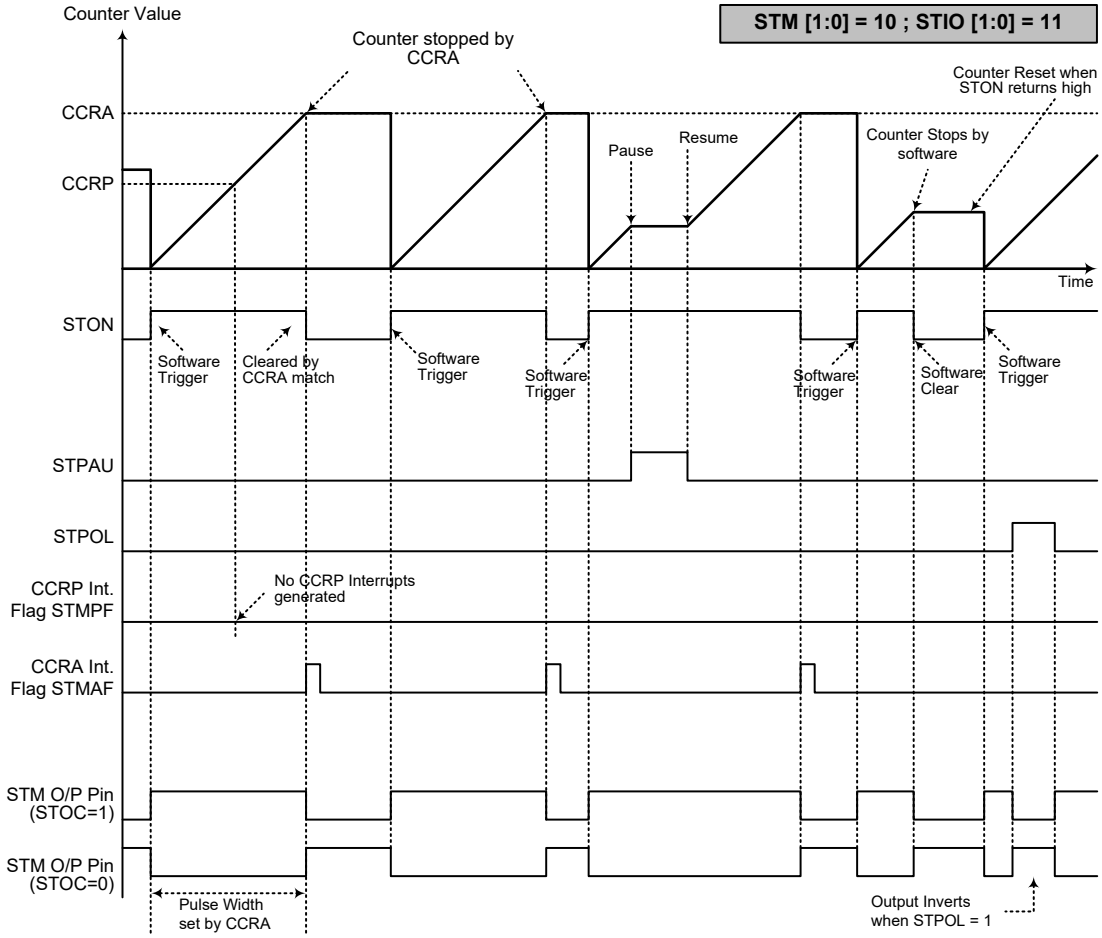

Single Pulse Output Mode

Note: 1. Counter stopped by CCRA

2. CCRP is not used

3. The pulse triggered by setting the STON bit high

4. In the Single Pulse Output Mode, STIO[1:0] must be set to “11” and can not be changed

Periodic Type TM – PTM

The Periodic Type TM contains four operating modes, which are Compare Match Output, Timer/Event Counter, Single Pulse Output and PWM Output modes. The Periodic TM can also be controlled with one external input pin and can drive one external output pin.

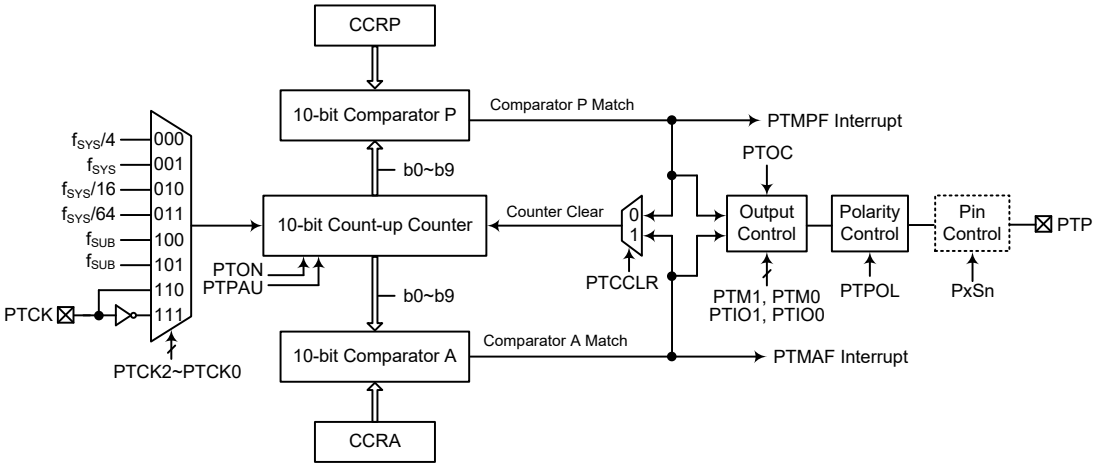

Note: The PTM external pins are pin-shared with other functions, so before using the PTM function, ensure that the pin-shared function registers have be set properly to enable the PTM pin function. The PTCK pin, if used, must also be set as an input by setting the corresponding bits in the port control register.

10-bit Periodic Type TM Block Diagram

Periodic Type TM Operation

The size of Periodic TM is 10-bit wide and its core is a 10-bit count-up counter which is driven by a user selectable internal or external clock source. There are also two internal comparators with the names, Comparator A and Comparator P. These comparators will compare the value in the counter with CCRP and CCRA registers. The CCRP and CCRA comparators are 10-bit wide whose value is compared with all counter bits.

The only way of changing the value of the 10-bit counter using the application program is to clear the counter by changing the PTON bit from low to high. The counter will also be cleared automatically by a counter overflow or a compare match with one of its associated comparators. When these conditions occur, a PTM interrupt signal will also usually be generated. The Periodic Type TM can operate in a number of different operational modes, can be driven by different clock sources including an input pin and can also control two output pins. All operating setup conditions are selected using relevant internal registers.

Periodic Type TM Register Description

Overall operation of the Periodic TM is controlled using a series of registers. A read only register pair exists to store the internal counter 10-bit value, while two read/write register pairs exist to store the internal 10-bit CCRA and CCRP value. The remaining two registers are control registers which setup the different operating and control modes.

Register Name	Bit							
	7	6	5	4	3	2	1	0
PTMC0	PTPAU	PTCK2	PTCK1	PTCK0	PTON	—	—	—
PTMC1	PTM1	PTM0	PTIO1	PTIO0	PTOC	PTPOL	D1	PTCCLR
PTMDL	D7	D6	D5	D4	D3	D2	D1	D0
PTMDH	—	—	—	—	—	—	D9	D8
PTMAL	D7	D6	D5	D4	D3	D2	D1	D0
PTMAH	—	—	—	—	—	—	D9	D8
PTMRPL	PTRP7	PTRP6	PTRP5	PTRP4	PTRP3	PTRP2	PTRP1	PTRP0
PTMRPH	—	—	—	—	—	—	PTRP9	PTRP8

10-bit Periodic TM Register List

- **PTMC0 Register**

Bit	7	6	5	4	3	2	1	0
Name	PTPAU	PTCK2	PTCK1	PTCK0	PTON	—	—	—
R/W	R/W	R/W	R/W	R/W	R/W	—	—	—
POR	0	0	0	0	0	—	—	—

Bit 7 **PTPAU**: PTM counter pause control
0: Run
1: Pause

The counter can be paused by setting this bit high. Clearing the bit to zero restores normal counter operation. When in a Pause condition the PTM will remain powered up and continue to consume power. The counter will retain its residual value when this bit changes from low to high and resume counting from this value when the bit changes to a low value again.

Bit 6~4 **PTCK2~PTCK0**: PTM counter clock selection
000: $f_{SYS}/4$
001: f_{SYS}
010: $f_H/16$
011: $f_H/64$
100: f_{SUB}
101: f_{SUB}
110: PTCK rising edge clock
111: PTCK falling edge clock

These three bits are used to select the clock source for the PTM. The external pin clock source can be chosen to be active on the rising or falling edge. The clock source f_{SYS} is the system clock, while f_H and f_{SUB} are other internal clocks, the details of which can be found in the Operating Modes and System Clocks section.

Bit 3 **PTON**: PTM counter on/off control
0: Off
1: On

This bit controls the overall on/off function of the PTM. Setting the bit high enables the counter to run while clearing the bit disables the PTM. Clearing this bit to zero will stop the counter from counting and turn off the PTM which will reduce its power consumption. When the bit changes state from low to high the internal counter value will be reset to zero, however when the bit changes from high to low, the internal counter will retain its residual value until the bit returns high again. If the PTM is in the Compare Match Output Mode or PWM output Mode or Single Pulse Output Mode, then the PTM output pin will be reset to its initial condition, as specified by the PTOC bit, when the PTON bit changes from low to high.

Bit 2~0 Unimplemented, read as “0”

• **PTMC1 Register**

Bit	7	6	5	4	3	2	1	0
Name	PTM1	PTM0	PTIO1	PTIO0	PTOC	PTPOL	D1	PTCCLR
R/W	R/W	R/W	R/W	R/W	R/W	R/W	R/W	R/W
POR	0	0	0	0	0	0	0	0

Bit 7~6 **PTM1~PTM0**: PTM operating mode selection
00: Compare Match Output Mode
01: Undefined
10: PWM Output Mode or Single Pulse Output Mode
11: Timer/Counter Mode

These bits setup the required operating mode for the PTM. To ensure reliable operation the PTM should be switched off before any changes are made to the PTM1 and PTM0 bits. In the Timer/Counter Mode, the PTM output pin state is undefined.

Bit 5~4 **PTIO1~PTIO0**: PTM external pin function selection

Compare Match Output Mode
00: No change
01: Output low
10: Output high
11: Toggle output

PWM Output Mode/Single Pulse Output Mode
00: PWM output inactive state
01: PWM output active state
10: PWM output
11: Single Pulse Output

Timer/Counter Mode
Unused

These two bits are used to determine how the PTM external pins change state when a certain condition is reached. The function that these bits select depends upon in which mode the PTM is running.

In the Compare Match Output Mode, the PTIO1 and PTIO0 bits determine how the PTM output pin changes state when a compare match occurs from the Comparator A. The PTM output pin can be setup to switch high, switch low or to toggle its present state when a compare match occurs from the Comparator A. When the bits are both zero, then no change will take place on the output. The initial value of the PTM output pin should be setup using the PTOC bit in the PTMC1 register. Note that the output level requested by the PTIO1 and PTIO0 bits must be different from the initial value setup using the PTOC bit otherwise no change will occur on the PTM output pin when a compare match occurs. After the PTM output pin changes state, it can be reset to its initial level by changing the level of the PTON bit from low to high.

In the PWM Output Mode, the PTIO1 and PTIO0 bits determine how the PTM output pin changes state when a certain compare match condition occurs. The PTM output function is modified by changing these two bits. It is necessary to only change the values of the PTIO1 and PTIO0 bits only after the PTM has been switched off. Unpredictable PWM outputs will occur if the PTIO1 and PTIO0 bits are changed when the PTM is running.

Bit 3 **PTOC**: PTM PTP output control

Compare Match Output Mode
0: Initial low
1: Initial high

PWM Output Mode/Single Pulse Output Mode
0: Active low
1: Active high

This is the output control bit for the PTM output pin. Its operation depends upon whether PTM is being used in the Compare Match Output Mode or in the PWM Output Mode/Single Pulse Output Mode. It has no effect if the PTM is in the Timer/Counter Mode. In the Compare Match Output Mode it determines the logic level of the PTM output pin before a compare match occurs. In the PWM Output Mode it determines if the PWM signal is active high or active low. In the Single Pulse Output Mode it determines the logic level of the PTM output pin when the PTON bit changes from low to high.

Bit 2 **PTPOL**: PTM PTP output polarity control
0: Non-invert
1: Invert

This bit controls the polarity of the PTP output pin. When the bit is set high the PTM output pin will be inverted and not inverted when the bit is zero. It has no effect if the PTM is in the Timer/Counter Mode.

Bit 1 **D1**: Reserved, must be fixed at "0"

Bit 0 **PTCCLR**: PTM counter clear condition selection
0: Comparator P match
1: Comparator A match

This bit is used to select the method which clears the counter. Remember that the Periodic TM contains two comparators, Comparator A and Comparator P, either of which can be selected to clear the internal counter. With the PTCCLR bit set high, the counter will be cleared when a compare match occurs from the Comparator A. When the bit is low, the counter will be cleared when a compare match occurs from the Comparator P or with a counter overflow. A counter overflow clearing method can only be implemented if the CCRP bits are all cleared to zero. The PTCCLR bit is not used in the PWM Output or Single Pulse Output Mode.

- **PTMDL Register**

Bit	7	6	5	4	3	2	1	0
Name	D7	D6	D5	D4	D3	D2	D1	D0
R/W	R	R	R	R	R	R	R	R
POR	0	0	0	0	0	0	0	0

Bit 7~0 **D7~D0**: PTM Counter Low Byte Register bit 7 ~ bit 0
PTM 10-bit Counter bit 7 ~ bit 0

- **PTMDH Register**

Bit	7	6	5	4	3	2	1	0
Name	—	—	—	—	—	—	D9	D8
R/W	—	—	—	—	—	—	R	R
POR	—	—	—	—	—	—	0	0

Bit 7~2 Unimplemented, read as "0"

Bit 1~0 **D9~D8**: PTM Counter High Byte Register bit 1 ~ bit 0
PTM 10-bit Counter bit 9 ~ bit 8

• **PTMAL Register**

Bit	7	6	5	4	3	2	1	0
Name	D7	D6	D5	D4	D3	D2	D1	D0
R/W	R/W	R/W	R/W	R/W	R/W	R/W	R/W	R/W
POR	0	0	0	0	0	0	0	0

Bit 7~0 **D7~D0**: PTM CCRA Low Byte Register bit 7 ~ bit 0
PTM 10-bit CCRA bit 7 ~ bit 0

• **PTMAH Register**

Bit	7	6	5	4	3	2	1	0
Name	—	—	—	—	—	—	D9	D8
R/W	—	—	—	—	—	—	R/W	R/W
POR	—	—	—	—	—	—	0	0

Bit 7~2 Unimplemented, read as “0”

Bit 1~0 **D9~D8**: PTM CCRA High Byte Register bit 1 ~ bit 0
PTM 10-bit CCRA bit 9 ~ bit 8

• **PTMRPL Register**

Bit	7	6	5	4	3	2	1	0
Name	PTRP7	PTRP6	PTRP5	PTRP4	PTRP3	PTRP2	PTRP1	PTRP0
R/W	R/W	R/W	R/W	R/W	R/W	R/W	R/W	R/W
POR	0	0	0	0	0	0	0	0

Bit 7~0 **PTRP7~PTRP0**: PTM CCRP Low Byte Register bit 7 ~ bit 0
PTM 10-bit CCRP bit 7 ~ bit 0

• **PTMRPH Register**

Bit	7	6	5	4	3	2	1	0
Name	—	—	—	—	—	—	PTRP9	PTRP8
R/W	—	—	—	—	—	—	R/W	R/W
POR	—	—	—	—	—	—	0	0

Bit 7~2 Unimplemented, read as “0”

Bit 1~0 **PTRP9~PTRP8**: PTM CCRP High Byte Register bit 1 ~ bit 0
PTM 10-bit CCRP bit 9 ~ bit 8

Periodic Type TM Operation Modes

The Periodic Type TM can operate in one of four operating modes, Compare Match Output Mode, PWM Output Mode, Single Pulse Output Mode or Timer/Counter Mode. The operating mode is selected using the PTM1 and PTM0 bits in the PTMC1 register.

Compare Match Output Mode

To select this mode, bits PTM1 and PTM0 in the PTMC1 register, should be set to “00” respectively. In this mode once the counter is enabled and running it can be cleared by three methods. These are a counter overflow, a compare match from Comparator A and a compare match from Comparator P. When the PTCCLR bit is low, there are two ways in which the counter can be cleared. One is when a compare match from Comparator P, the other is when the CCRP bits are all zero which allows the counter to overflow. Here both PTMAF and PTMPF interrupt request flags for Comparator A and Comparator P respectively, will both be generated.

If the PTCCLR bit in the PTMC1 register is high then the counter will be cleared when a compare match occurs from Comparator A. However, here only the PTMAF interrupt request flag will be generated even if the value of the CCRP bits is less than that of the CCRA registers. Therefore when PTCCLR is high no PTMPF interrupt request flag will be generated. In the Compare Match Output Mode, the CCRA can not be set to “0”.

If the CCRA bits are all zero, the counter will overflow when its reaches its maximum 10-bit, 3FF Hex, value, however here the PTMAF interrupt request flag will not be generated.

As the name of the mode suggests, after a comparison is made, the PTM output pin will change state. The PTM output pin condition however only changes state when a PTMAF interrupt request flag is generated after a compare match occurs from Comparator A. The PTMPF interrupt request flag, generated from a compare match occurs from Comparator P, will have no effect on the PTM output pin. The way in which the PTM output pin changes state are determined by the condition of the PTIO1 and PTIO0 bits in the PTMC1 register. The PTM output pin can be selected using the PTIO1 and PTIO0 bits to go high, to go low or to toggle from its present condition when a compare match occurs from Comparator A. The initial condition of the PTM output pin, which is setup after the PTON bit changes from low to high, is setup using the PTOC bit. Note that if the PTIO1 and PTIO0 bits are zero then no pin change will take place.

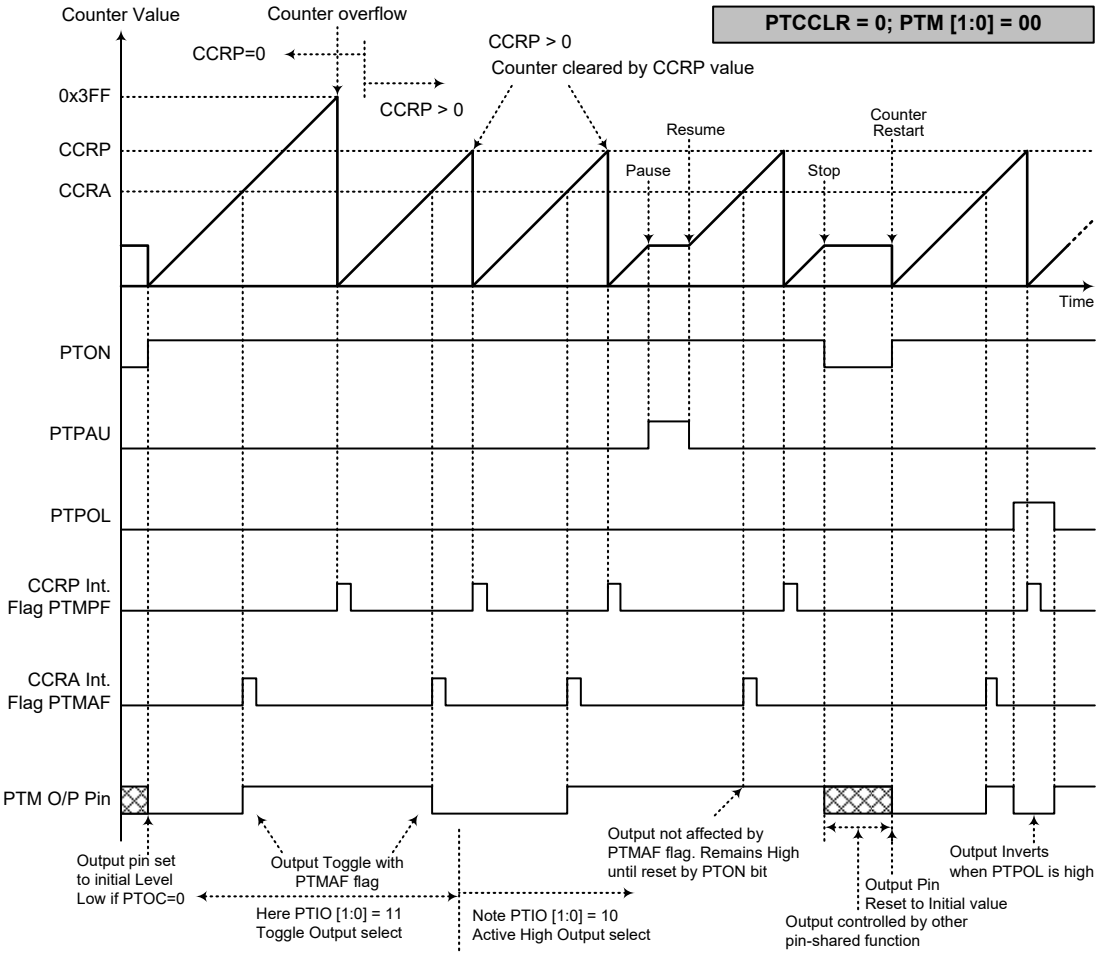

Compare Match Output Mode – PTCCLR=0

Note: 1. With PTCCLR=0, a Comparator P match will clear the counter

2. The PTM output pin is controlled only by the PTMAF flag

3. The output pin is reset to its initial state by a PTON bit rising edge

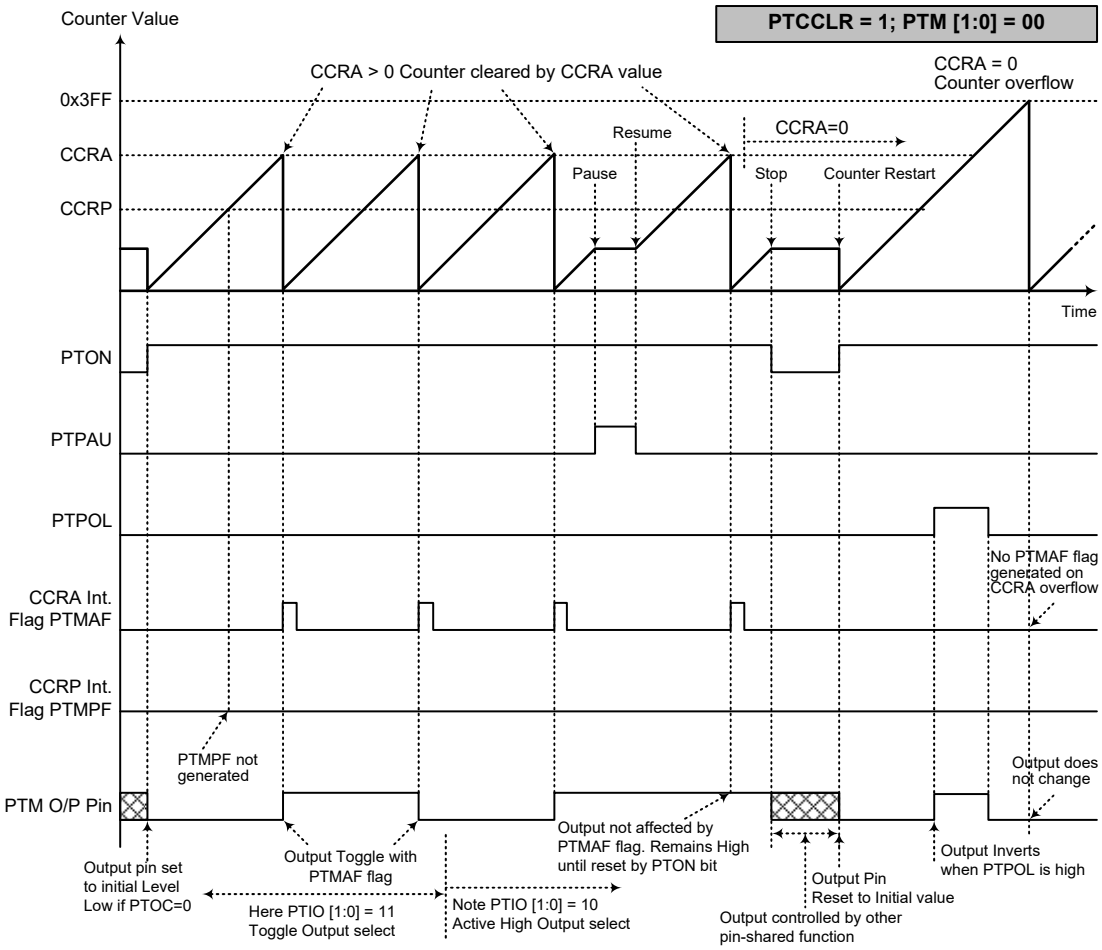

Compare Match Output Mode – PTCCLR=1

Note: 1. With PTCCLR=1, a Comparator A match will clear the counter

2. The PTM output pin is controlled only by the PTMAF flag

3. The output pin is reset to its initial state by a PTON bit rising edge

4. A PTMPF flag is not generated when PTCCLR=1

Timer/Counter Mode

To select this mode, bits PTM1 and PTM0 in the PTMC1 register should be set to “11” respectively. The Timer/Counter Mode operates in an identical way to the Compare Match Output Mode generating the same interrupt flags. The exception is that in the Timer/Counter Mode the PTM output pin is not used. Therefore the above description and Timing Diagrams for the Compare Match Output Mode can be used to understand its function. As the PTM output pin is not used in this mode, the pin can be used as a normal I/O pin or other pin-shared functions.

PWM Output Mode

To select this mode, bits PTM1 and PTM0 in the PTMC1 register should be set to “10” respectively. The PWM function within the PTM is useful for applications which require functions such as motor control, heating control, illumination control, etc. By providing a signal of fixed frequency but of varying duty cycle on the PTM output pin, a square wave AC waveform can be generated with varying equivalent DC RMS values.

As both the period and duty cycle of the PWM waveform can be controlled, the choice of generated waveform is extremely flexible. In the PWM Output Mode, the PTCCLR bit has no effect as the PWM period. Both of the CCRP and CCRA registers are used to generate the PWM waveform, one register is used to clear the internal counter and thus control the PWM waveform frequency, while the other one is used to control the duty cycle. The PWM waveform frequency and duty cycle can therefore be controlled by the values in the CCRA and CCRP registers.

An interrupt flag, one for each of the CCRA and CCRP, will be generated when a compare match occurs from either Comparator A or Comparator P. The PTOC bit in the PTMC1 register is used to select the required polarity of the PWM waveform while the two PTIO1 and PTIO0 bits are used to enable the PWM output or to force the PTM output pin to a fixed high or low level. The PTPOL bit is used to reverse the polarity of the PWM output waveform.

- **10-bit PWM Output Mode, Edge-aligned Mode**

CCRP	1~1023	0
Period	1~1023	1024
Duty	CCRA	

If f_{SYS}=16MHz, PTM clock source select $f_{SYS}/4$, CCRP=512 and CCRA=128,

The PTM PWM output frequency=($f_{SYS}/4$)/512=$f_{SYS}/2048$=7.8125kHz, duty=128/512=25%,

If the Duty value defined by the CCRA register is equal to or greater than the Period value, then the PWM output duty is 100%.

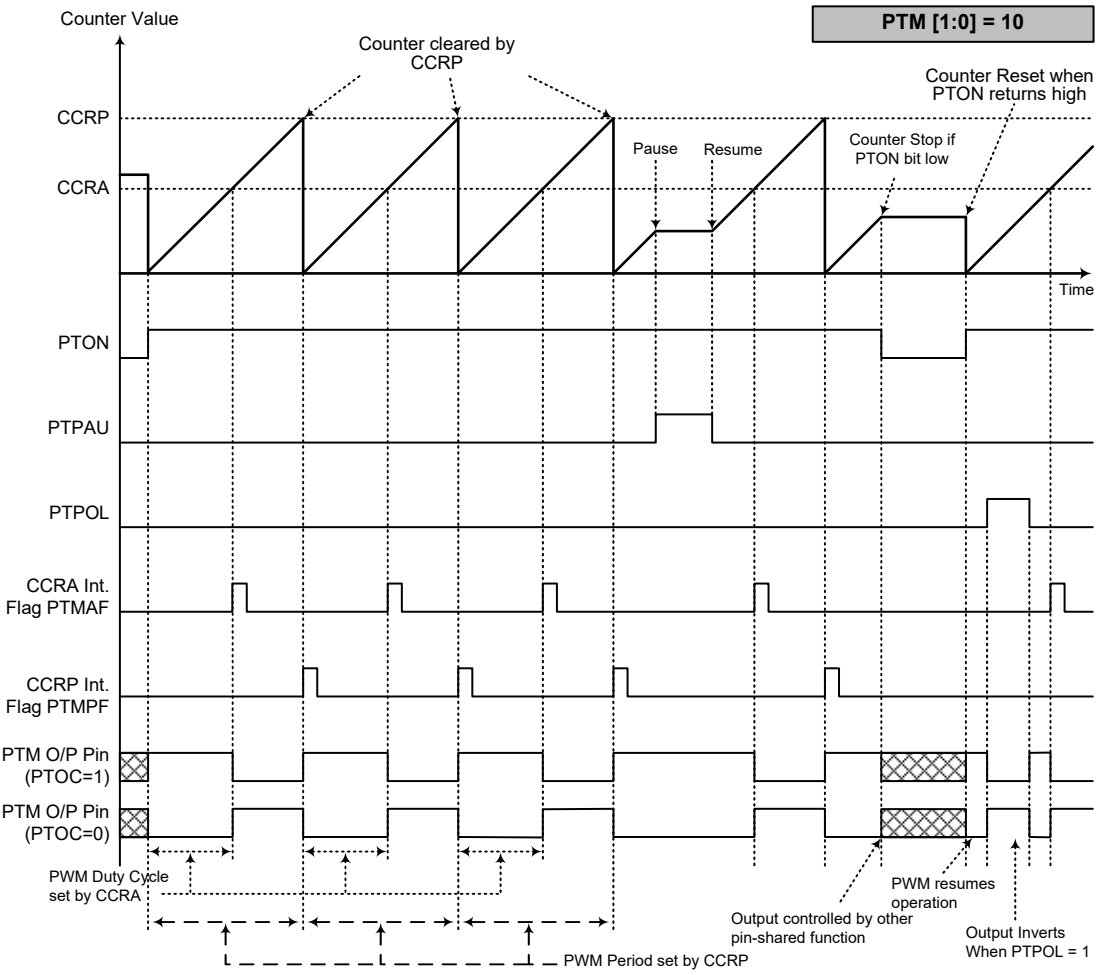

PWM Output Mode

Note: 1. The counter is cleared by CCRP

2. A counter clear sets the PWM Period

3. The internal PWM function continues running even when PTIO[1:0]=00 or 01

4. The PTCCLR bit has no influence on PWM operation

Single Pulse Output Mode

To select this mode, bits PTM1 and PTM0 in the PTMC1 register should be set to “10” respectively and also the PTIO1 and PTIO0 bits should be set to “11” respectively. The Single Pulse Output Mode, as the name suggests, will generate a single shot pulse on the PTM output pin.

The trigger for the pulse output leading edge is a low to high transition of the PTON bit, which can be implemented using the application program. However in the Single Pulse Output Mode, the PTON bit can also be made to automatically change from low to high using the external PTCK pin, which will in turn initiate the Single Pulse output. When the PTON bit transitions to a high level, the counter will start running and the pulse leading edge will be generated. The PTON bit should remain high when the pulse is in its active state. The generated pulse trailing edge will be generated when the PTON bit is cleared to zero, which can be implemented using the application program or when a compare match occurs from Comparator A.

However a compare match from Comparator A will also automatically clear the PTON bit and thus generate the Single Pulse output trailing edge. In this way the CCRA value can be used to control the pulse width. A compare match from Comparator A will also generate a PTM interrupt. The counter can only be reset back to zero when the PTON bit changes from low to high when the counter restarts. In the Single Pulse Output Mode CCRP is not used. The PTCCLR is not used in this Mode.

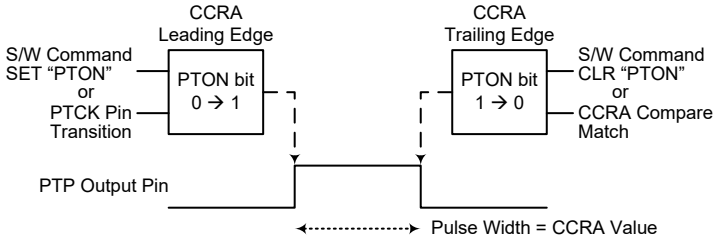

Single Pulse Generation

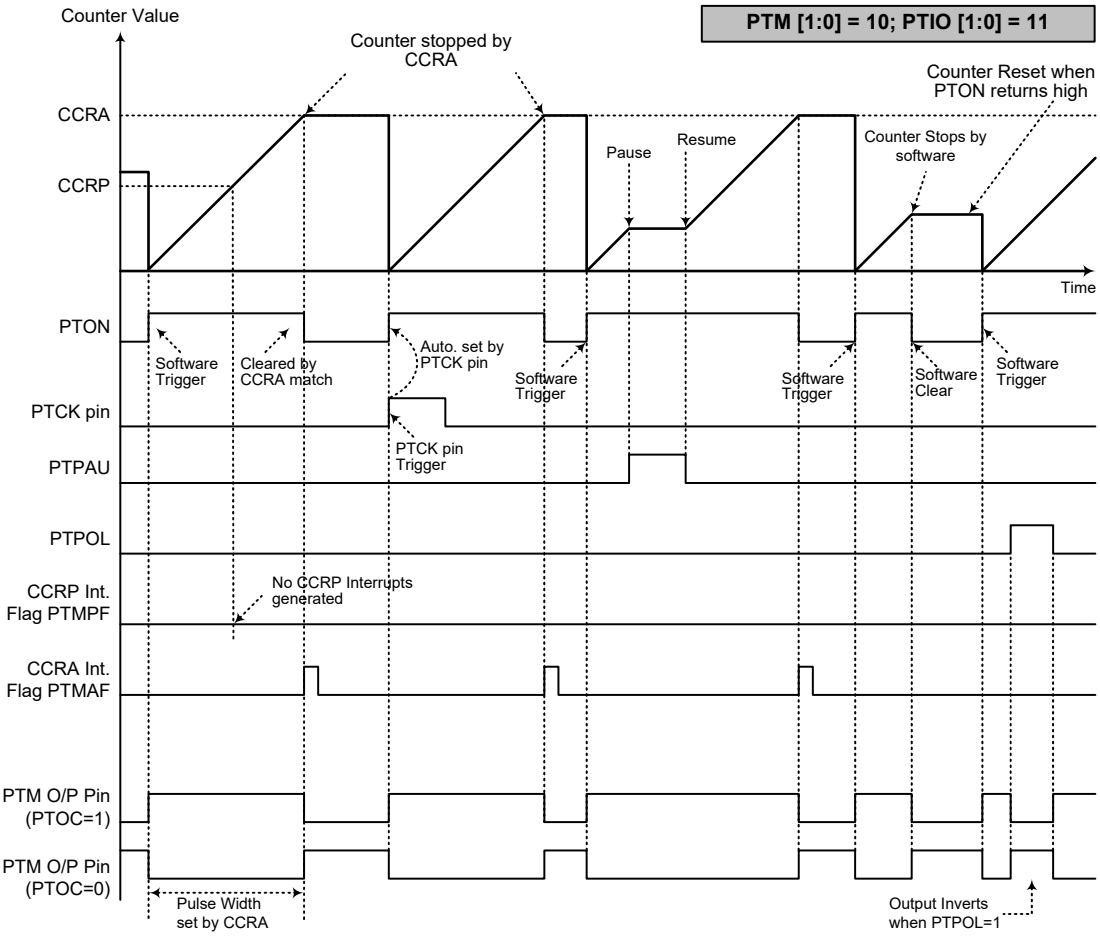

Single Pulse Output Mode

Note: 1. Counter stopped by CCRA

2. CCRP is not used

3. The pulse triggered by the PTCK pin or by setting the PTON bit high

4. A PTCK pin active edge will automatically set the PTON bit high

5. In the Single Pulse Output Mode, PTIO[1:0] must be set to “11” and can not be changed

Analog to Digital Converter

The need to interface to real world analog signals is a common requirement for many electronic systems. However, to properly process these signals by a microcontroller, they must first be converted into digital signals by A/D converters. By integrating the A/D conversion electronic circuitry into the microcontroller, the need for external components is reduced significantly with the corresponding follow-on benefits of lower costs and reduced component space requirements.

A/D Converter Overview

The device contains a multi-channel analog to digital converter which can directly interface to external analog signals, such as that from sensors or other control signals and convert these signals directly into a 12-bit digital value. It also can convert the internal signals, such as the internal reference voltage, into a 12-bit digital value. The external or internal analog signal to be converted is determined by the SAINS3~SAINS0 bits together with the SACS3~SACS0 bits. Note that when the internal analog signal is to be converted using the SAINS bit field, the external channel analog input will be automatically be switched off. More detailed information about the A/D converter input signal is described in the "A/D Converter Control Registers" and "A/D Converter Input Signals" sections respectively.

External Input Channels	Internal Analog Signals	A/D Signal Select
AN3~AN7	AV_{DD}, $AV_{DD}/2$, $AV_{DD}/4$, V_R, $V_R/2$, $V_R/4$	SAINS3~SAINS0 SACS3~SACS0

The accompanying block diagram shows the overall internal structure of the A/D converter, together with its associated registers.

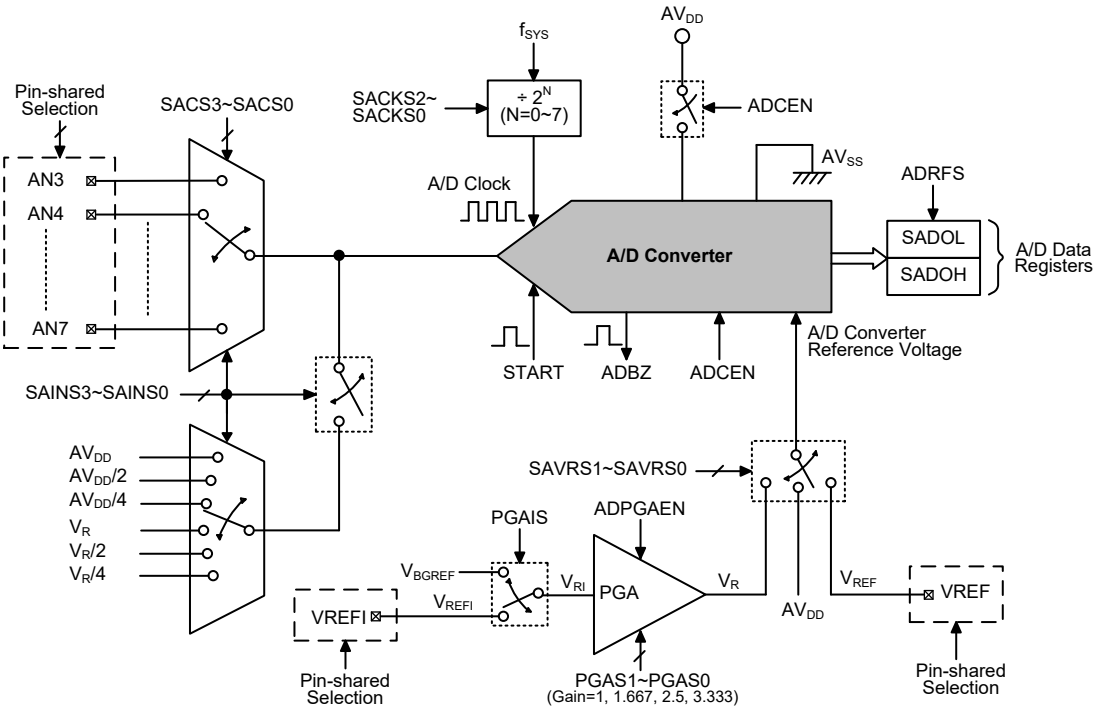

A/D Converter Structure

A/D Converter Register Description

Overall operation of the A/D converter is controlled using a series of registers. A read only register pair exists to store the A/D converter data 12-bit value. Three registers, SADC0, SADC1 and SADC2, are the control registers which setup the operating conditions and control function of the A/D converter. The VBGRC register contains the VBGREN bit to control the bandgap reference voltage.

Register Name	Bit							
	7	6	5	4	3	2	1	0
SADOL (ADRFS=0)	D3	D2	D1	D0	—	—	—	—
SADOL (ADRFS=1)	D7	D6	D5	D4	D3	D2	D1	D0
SADOH (ADRFS=0)	D11	D10	D9	D8	D7	D6	D5	D4
SADOH (ADRFS=1)	—	—	—	—	D11	D10	D9	D8
SADC0	START	ADBZ	ADCEN	ADRFS	SACS3	SACS2	SACS1	SACS0
SADC1	SAINS3	SAINS2	SAINS1	SAINS0	—	SACKS2	SACKS1	SACKS0
SADC2	ADPGAEN	—	—	PGAIS	SAVRS1	SAVRS0	PGAGS1	PGAGS0
VBGRC	—	—	—	—	—	—	—	VBGREN

A/D Converter Register List

A/D Converter Data Registers – SADOL, SADOH

As the device contains an internal 12-bit A/D converter, it requires two data registers to store the converted value. These are a high byte register, known as SADOH, and a low byte register, known as SADOL. After the conversion process takes place, these registers can be directly read by the microcontroller to obtain the digitised conversion value. As only 12 bits of the 16-bit register space is utilised, the format in which the data is stored is controlled by the ADRFS bit in the SADC0 register as shown in the accompanying table. D0~D11 are the A/D conversion result data bits. Any unused bits will be read as zero. Note that the A/D converter data register contents will keep unchanged if the A/D converter is disabled.

ADRFS	SADOH								SADOL							
	7	6	5	4	3	2	1	0	7	6	5	4	3	2	1	0
0	D11	D10	D9	D8	D7	D6	D5	D4	D3	D2	D1	D0	0	0	0	0
1	0	0	0	0	D11	D10	D9	D8	D7	D6	D5	D4	D3	D2	D1	D0

A/D Converter Data Registers

A/D Converter Control Registers – SADC0, SADC1, SADC2

To control the function and operation of the A/D converter, several control registers known as SADC0, SADC1, SADC2 are provided. These 8-bit registers define functions such as the selection of which analog channel is connected to the internal A/D converter, the digitised data format, the A/D converter clock source as well as controlling the start function and monitoring the A/D converter busy status. As the device contains only one actual analog to digital converter hardware circuit, each of the external and internal analog signals must be routed to the converter. The SAINS bit field in the SADC1 register and SACS bit field in the SADC0 register are used to which analog signal derived from the external or internal signals will be connected to the A/D converter. The A/D converter also contains programmable gain amplifier, PGA, to generate the A/D converter internal reference voltage. The overall operation of the PGA is controlled using the SADC2 register.

The relevant pin-shared function selection bits determine which pins on I/O ports are used as analog inputs for the A/D converter input and which pins are not to be used as the A/D converter input. When the pin is selected to be an A/D converter input, its original function whether it is an I/O or other pin-shared function will be removed. In addition, any internal pull-high resistor connected to the pin will be automatically removed if the pin is selected to be an A/D converter input.

- **SADC0 Register**

Bit	7	6	5	4	3	2	1	0
Name	START	ADBZ	ADCEN	ADRFS	SACS3	SACS2	SACS1	SACS0
R/W	R/W	R	R/W	R/W	R/W	R/W	R/W	R/W
POR	0	0	0	0	0	0	0	0

Bit 7 **START**: Start the A/D conversion
0→1→0: Start A/D conversion
This bit is used to initiate an A/D conversion process. The bit is normally low but if set high and then cleared low again, the A/D converter will initiate a conversion process.

Bit 6 **ADBZ**: A/D Converter busy flag
0: No A/D conversion is in progress
1: A/D conversion is in progress
This read only flag is used to indicate whether the A/D conversion is in progress or not. When the START bit is set from low to high and then to low again, the ADBZ flag will be set high to indicate that the A/D conversion is initiated. The ADBZ flag will be cleared to zero after the A/D conversion is complete.

Bit 5 **ADCEN**: A/D Converter function enable control
0: Disable
1: Enable
This bit controls the A/D converter internal function. This bit should be set high to enable the A/D converter. If the bit is cleared to zero, then the A/D converter will be switched off reducing the device power consumption. When the A/D converter function is disabled, the contents of the A/D converter data register pair, SADOH and SADOL, will keep unchanged.

Bit 4 **ADRFS**: A/D Converter data format control
0: ADC output data format → SADOH=D[11:4]; SADOL=D[3:0]
1: ADC output data format → SADOH=D[11:8]; SADOL=D[7:0]
This bit controls the format of the 12-bit converted A/D converter value in the two A/D converter data registers. Details are provided in the A/D converter data register section.

Bit 3~0 **SACS3~SACS0**: A/D converter external analog input channel selection
0000: Reserved, cannot be used
0001: Reserved, cannot be used
0010: Reserved, cannot be used
0011: AN3
0100: AN4
0101: AN5
0110: AN6
0111: AN7
1000: Reserved, cannot be used
1001: Reserved, cannot be used
1010: Reserved, cannot be used
1011: Reserved, cannot be used
1100~1111: Undefined, input floating

• **SADC1 Register**

Bit	7	6	5	4	3	2	1	0
Name	SAINS3	SAINS2	SAINS1	SAINS0	—	SACKS2	SACKS1	SACKS0
R/W	R/W	R/W	R/W	R/W	—	R/W	R/W	R/W
POR	0	0	0	0	—	0	0	0

Bit 7~4 **SAINS3~SAINS0**: A/D converter input signal selection
0000: External signal – External analog channel input, ANn
0001: Internal signal – Internal A/D converter power supply voltage AV_{DD}
0010: Internal signal – Internal A/D converter power supply voltage $AV_{DD}/2$
0011: Internal signal – Internal A/D converter power supply voltage $AV_{DD}/4$
0100: External signal – External analog channel input, ANn
0101: Internal signal – Internal signal derived from PGA output V_R
0110: Internal signal – Internal signal derived from PGA output $V_R/2$
0111: Internal signal – Internal signal derived from PGA output $V_R/4$
10xx: Internal signal – connected to ground
1100~1111: External signal – External analog channel input, ANn
When the internal analog signal is selected to be converted, the external channel input signal will automatically be switched off regardless of the SACS bit field value. It will prevent the external channel input from being connected together with the internal analog signal.

Bit 3 Unimplemented, read as "0"

Bit 2~0 **SACKS2~SACKS0**: A/D conversion clock source selection
000: f_{SYS}
001: $f_{SYS}/2$
010: $f_{SYS}/4$
011: $f_{SYS}/8$
100: $f_{SYS}/16$
101: $f_{SYS}/32$
110: $f_{SYS}/64$
111: $f_{SYS}/128$

• **SADC2 Register**

Bit	7	6	5	4	3	2	1	0
Name	ADPGAEN	—	—	PGAIS	SAVRS1	SAVRS0	PGAGS1	PGAGS0
R/W	R/W	—	—	R/W	R/W	R/W	R/W	R/W
POR	0	—	—	0	0	0	0	0

Bit 7 **ADPGAEN**: A/D converter PGA enable/disable control
0: Disable
1: Enable
This bit is used to control the A/D converter internal PGA function. When the PGA output voltage is selected as A/D input or A/D reference voltage, the PGA needs to be enabled by setting this bit high. Otherwise the PGA needs to be disabled by clearing the ADPGAEN bit to zero to conserve power.

Bit 6~5 Unimplemented, read as "0"

Bit 4 **PGAIS**: PGA input voltage (V_{RI}) selection
0: From VREFI pin
1: From internal reference voltage V_{BGREF}
When the internal independent reference voltage V_{BGREF} is selected as the PGA input, the external reference voltage on the VREFI pin will be automatically switched off. In addition, the internal bandgap reference V_{BGREF} should be enabled by setting the VBGREN bit in the VBGRC register to "1".

Bit 3~2 **SAVRS1~SAVRS0**: A/D converter reference voltage selection
00: Internal A/D converter power, AV_{DD}
01: External VREF pin
1x: Internal PGA output voltage, V_R

These bits are used to select the A/D converter reference voltage source. When the internal reference voltage source is selected, the reference voltage derived from the external VREF pin will automatically be switched off.

Bit 1~0 **PGAGS1~PGAGS0**: PGA gain select
00: Gain=1
01: Gain=1.667 – V_R=2V as V_{RI}=1.2V
10: Gain=2.5 – V_R=3V as V_{RI}=1.2V
11: Gain=3.333 – V_R=4V as V_{RI}=1.2V

These bits are used to select the PGA gain. Note that here the gain is guaranteed only when the PGA input voltage is equal to 1.2V.

• VBGRC Register

Bit	7	6	5	4	3	2	1	0
Name	—	—	—	—	—	—	—	VBGREN
R/W	—	—	—	—	—	—	—	R/W
POR	—	—	—	—	—	—	—	0

Bit 7~1 Unimplemented, read as “0”

Bit 0 **VBGREN**: Bandgap reference voltage control
0: Disable
1: Enable

This bit is used to enable the internal Bandgap reference circuit. The internal Bandgap reference circuit should first be enabled before the V_{BGREF} voltage is selected to be used. A specific start-up time is necessary for the Bandgap circuit to become stable and accurate.

A/D Converter Reference Voltage

The actual reference voltage supply to the A/D Converter can be supplied from the internal A/D converter power, AV_{DD}, an external reference source supplied on pin VREF or an internal reference voltage V_R determined by the SAVRS1~SAVRS0 bits in the SADC2 register. The internal reference voltage V_R is an amplified signal through a programmable gain amplifier, PGA, which is controlled by the ADPGAEN bit in the SADC2 register. The PGA gain can be equal to 1, 1.667, 2.5 or 3.333 and selected using the PGAGS1~PGAGS0 bits in the SADC2 register. The PGA input can come from the external reference input pin, VREFI, or an internal Bandgap reference voltage, V_{BGREF}, selected by the PGAIS bit in the SADC2 register. As the VREFI and VREF pin both are pin-shared with other functions, when the VREFI or VREF pin is selected as the reference voltage pin, the VREFI or VREF pin-shared function selection bits should first be properly configured to disable other pin-shared functions. However, if the internal reference signal is selected as the reference source, the external reference input from the VREFI or VREF pin will automatically be switched off by hardware.

Note that the internal Bandgap reference circuit should first be enabled before the VBGREF is selected to be used. A specific start-up time is necessary for the Bandgap circuit to become stable and accurate.

A/D Converter Input Signals

All of the external A/D analog input pins are pin-shared with the I/O pins as well as other functions. The corresponding pin-shared function selection bits in the PxS1 and PxS0 registers, determine whether the external input pins are set as A/D converter analog channel inputs or whether they have other functions. If the corresponding pin is setup to be an A/D converter analog channel input, the original pin functions will be disabled. In this way, pins can be changed under program control to change their function between A/D inputs and other functions. All pull-high resistors, which are setup through register programming, will be automatically disconnected if the pins are setup as A/D converter inputs. Note that it is not necessary to first setup the A/D pin as an input in the port control register to enable the A/D converter input as when the relevant A/D converter input function selection bits enable an A/D converter input, the status of the port control register will be overridden.

As the device contains only one actual analog to digital converter hardware circuit, each of the external and internal analog signals must be routed to the converter. The SAINS3~SAINS0 bits in the SADC1 register are used to determine that the analog signal to be converted comes from the external channel input or internal analog signal. The SACS3~SACS0 bits in the SADC0 register are used to determine which external channel input is selected to be converted. If the SAINS3~SAINS0 bits are set to “0000”, the external channel input will be selected to be converted and the SACS3~SACS0 bits can determine which external channel is selected.

When the SAINS field is set to the value of “0x01”, “0x10” or “0x11”, the internal analog signal will be selected. If the internal analog signal is selected to be converted, the external channel signal input will automatically be switched off regardless of the SACS field value. It will prevent the external channel input from being connected together with the internal analog signal.

SAINS[3:0]	SACS[3:0]	Input Signals	Description
0000, 0100, 11xx	0011~0111	AN3~AN7	External channel analog input ANn
	1100~1111	—	Floating, no external channel is selected
0001	xxxx	AV_{DD}	Internal A/D converter power supply voltage AV_{DD}
0010	xxxx	$AV_{DD}/2$	Internal A/D converter power supply voltage $AV_{DD}/2$
0011	xxxx	$AV_{DD}/4$	Internal A/D converter power supply voltage $AV_{DD}/4$
0101	xxxx	V_R	Internal A/D converter PGA output V_R
0110	xxxx	$V_R/2$	Internal A/D converter PGA output $V_R/2$
0111	xxxx	$V_R/4$	Internal A/D converter PGA output $V_R/4$
10xx	xxxx	AV_{SS}	Connected to the ground

A/D Converter Input Signal Selection

A/D Converter Operation

The START bit in the SADC0 register is used to start the A/D conversion. When the microcontroller sets this bit from low to high and then low again, an analog to digital conversion cycle will be initiated.

The ADBZ bit in the SADC0 register is used to indicate whether the analog to digital conversion process is in process or not. This bit will be automatically set to “1” by the microcontroller after an A/D conversion is successfully initiated. When the A/D conversion is complete, the ADBZ will be cleared to “0”. In addition, the corresponding A/D converter interrupt request flag will be set in the interrupt control register, and if the interrupts are enabled, an appropriate internal interrupt signal will be generated. This A/D converter internal interrupt signal will direct the program flow to the associated A/D converter internal interrupt address for processing. If the A/D converter internal interrupt is disabled, the microcontroller can be used to poll the ADBZ bit in the SADC0 register to check whether it has been cleared as an alternative method of detecting the end of an A/D conversion cycle.

The clock source for the A/D converter, which originates from the system clock f_{SYS}, can be chosen to be either f_{SYS} or a subdivided version of f_{SYS}. The division ratio value is determined by the SACKS2~SACKS0 bits in the SADC1 register. Although the A/D conversion clock source is determined by the system clock f_{SYS}, and by bits SACKS2~SACKS0, there are some limitations on the A/D conversion clock source speed that can be selected. As the recommended value of permissible A/D conversion clock period, t_{ADCK}, is from 0.5μs to 10μs, care must be taken for system clock frequencies. For example, if the system clock operates at a frequency of 8MHz, the SACKS2~SACKS0 bits should not be set to "000", "001" or "111". Doing so will give A/D conversion clock periods that are less than the minimum A/D conversion clock period or greater than the maximum A/D conversion clock period which may result in inaccurate A/D conversion values. Refer to the following table for examples, where values marked with an asterisk * special care must be taken.

f_{SYS}	A/D Conversion Clock Period (t_{ADCK})							
	SACKS[2:0] = 000 (f_{SYS})	SACKS[2:0] = 001 (f_{SYS}/2)	SACKS[2:0] = 010 (f_{SYS}/4)	SACKS[2:0] = 011 (f_{SYS}/8)	SACKS[2:0] = 100 (f_{SYS}/16)	SACKS[2:0] = 101 (f_{SYS}/32)	SACKS[2:0] = 110 (f_{SYS}/64)	SACKS[2:0] = 111 (f_{SYS}/128)
1MHz	1μs	2μs	4μs	8μs	16μs*	32μs*	64μs*	128μs*
2MHz	500ns	1μs	2μs	4μs	8μs	16μs*	32μs*	64μs*
4MHz	250ns*	500ns	1μs	2μs	4μs	8μs	16μs*	32μs*
8MHz	125ns*	250ns*	500ns	1μs	2μs	4μs	8μs	16μs*
12MHz	83ns*	167ns*	333ns*	667ns	1.33μs	2.67μs	5.33μs	10.67μs*
16MHz	62.5ns*	125ns*	250ns*	500ns	1μs	2μs	4μs	8μs

A/D Conversion Clock Period Examples

Controlling the power on/off function of the A/D conversion circuitry is implemented using the ADCEN bit in the SADC0 register. This bit must be set high to power on the A/D converter. When the ADCEN bit is set high to power on the A/D conversion internal circuitry, a certain delay as indicated in the timing diagram must be allowed before an A/D conversion is initiated. Even if no pins are selected for use as A/D converter inputs by configuring the corresponding pin control bits, if the ADCEN bit is high then some power will still be consumed. In power conscious applications it is therefore recommended that the ADCEN is set low to reduce power consumption when the A/D converter function is not being used.

A/D Conversion Rate and Timing Diagram

A complete A/D conversion contains two parts, data sampling and data conversion. The data sampling which is defined as t_{ADS} takes 4 A/D conversion clock periods and the data conversion takes 12 A/D converter clock periods. Therefore a total of 16 A/D conversion clock periods for an A/D conversion which is defined as t_{ADC} are necessary.

Maximum single A/D conversion rate = 1÷(A/D clock period×16)

The accompanying diagram shows graphically the various stages involved in an external channel input signal analog to digital conversion process and its associated timing. After an A/D conversion process has been initiated by the application program, the microcontroller internal hardware will begin to carry out the conversion, during which time the program can continue with other functions. The time taken for an A/D conversion is $16t_{ADCK}$ where t_{ADCK} is equal to the A/D conversion clock period.

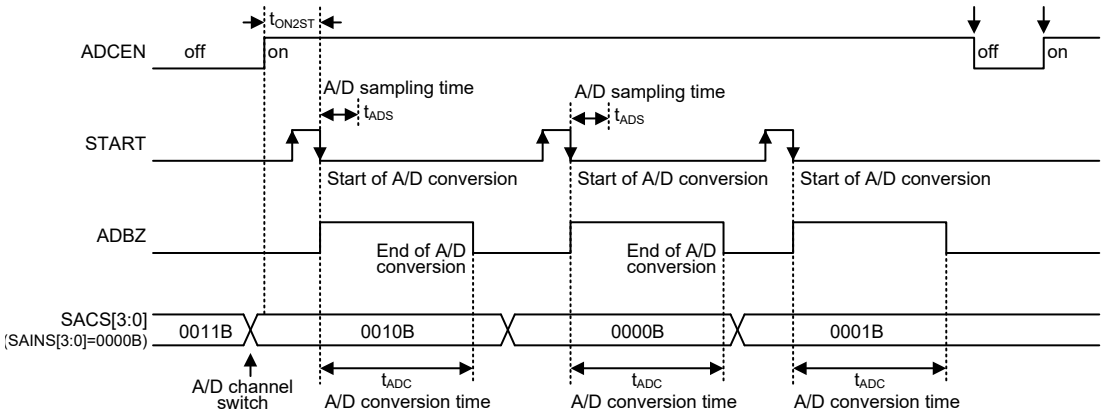

A/D Conversion Timing – External Channel Input

Summary of A/D Conversion Steps

The following summarises the individual steps that should be executed in order to implement an A/D conversion process.

- Step 1
  Select the required A/D conversion clock by properly programming the SACKS2~SACKS0 bits in the SADC1 register.
- Step 2
  Enable the A/D converter by setting the ADCEN bit in the SADC0 register to “1”.
- Step 3
  Select which signal is to be connected to the internal A/D converter by correctly configuring the SAINS and SACS bit fields.
  Select the external channel input to be converted, go to Step 4.
  Select the internal analog signal to be converted, go to Step 5.
- Step 4
  If the A/D input signal comes from the external channel input selected by configuring the SAINS bit field, the corresponding pin should first be configured as an A/D input function by configuring the relevant pin function control bits. The desired external channel input should be selected by configuring the SACS field. After this step, go to Step 6.
- Step 5
  If the A/D input signal is selected to come from the internal analog signal, the SAINS field should be properly configured and then the external channel analog input will automatically be disconnected regardless of the SACS bit field value. After this step, go to Step 6.
- Step 6
  Select A/D converter output data format by configuring the ADRFS bit in the SADC0 register.
- Step 7
  Select the A/D converter reference voltage source by configuring the SAVRS bit field.
  Select the PGA input signal and the desired PGA gain if the PGA output voltage, V_R, is selected as the A/D converter reference voltage.
- Step 8
  If A/D converter interrupt is used, the interrupt control registers must be correctly configured to ensure the A/D converter interrupt function is active. The master interrupt control bit, EMI, and the A/D converter interrupt bits, ADE, must both set high in advance.

- Step 9
  The A/D conversion procedure can now be initialised by setting the START bit from low to high and then low again.
- Step 10
  If A/D conversion is in progress, the ADBZ flag will be set high. After the A/D conversion process is completed, the ADBZ flag will go low and then output data can be read from the SADOH and SADOL registers. If the ADC interrupt is enabled and the stack is not full, data can be acquired by interrupt service program.

Note: When checking for the end of the conversion process, if the method of polling the ADBZ bit in the SADC0 register is used, the interrupt enable step above can be omitted.

Programming Considerations

During microcontroller operations where the A/D converter is not being used, the A/D conversion internal circuitry can be switched off to reduce power consumption by setting the ADCEN bit low in the SADC0 register. When this happens, the internal A/D conversion circuits will not consume power irrespective of what analog voltage is applied to their input lines. If the A/D converter input lines are used as normal I/Os, then care must be taken as if the input voltage is not at a valid logic level, then this may lead to some increase in power consumption.

A/D Converter Function

As the device contains a 12-bit A/D converter, its full-scale converted digitised value is equal to FFFH. Since the full-scale analog input value is equal to the actual A/D converter reference voltage, V_{REF}, this gives a single bit analog input value of V_{REF} divided by 4096.

$$1\ LSB = V_{REF} \div 4096$$

The A/D Converter input voltage value can be calculated using the following equation:

$$\text{A/D converter input voltage} = \text{A/D converter output digital value} \times V_{REF} \div 4096$$

The diagram shows the ideal transfer function between the analog input value and the digitised output value for the A/D converter. Except for the digitised zero value, the subsequent digitised values will change at a point 0.5 LSB below where they would change without the offset, and the last full scale digitised value will change at a point 1.5 LSB below the V_{REF} level.

Note that here the V_{REF} voltage is the actual A/D converter reference voltage determined by the SAVRS bit field.

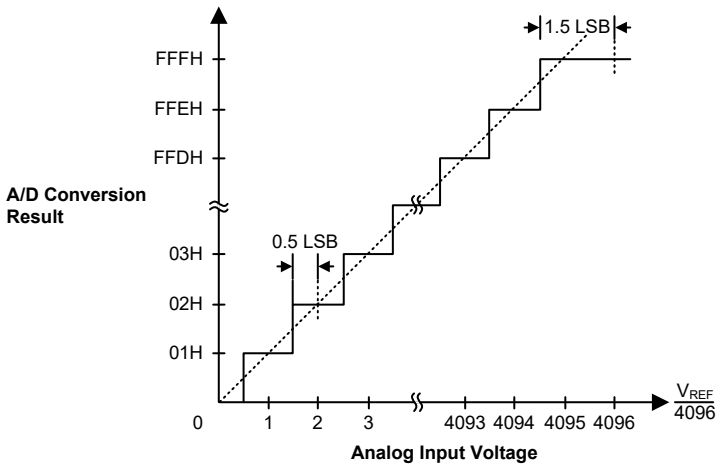

Ideal A/D Conversion Function

A/D Conversion Programming Examples

The following two programming examples illustrate how to setup and implement an A/D conversion. In the first example, the method of polling the ADBZ bit in the SADC0 register is used to detect when the conversion cycle is complete, whereas in the second example, the A/D converter interrupt is used to determine when the conversion is complete.

Example: using an ADBZ polling method to detect the end of conversion

```
clr  ADE              ; disable ADC interrupt
mov  a,03H            ; select fSYS/8 as ADC clock
mov  SADC1,a
set  ADCEN
mov  a,02h            ; setup PBS0 to configure pin AN0
mov  PBS0,a
mov  a,20h
mov  SADC0,a          ; enable and connect AN0 channel to A/D converter
:
start_conversion:
clr  START            ; high pulse on start bit to initiate conversion
set  START            ; reset A/D converter
clr  START            ; start A/D conversion
polling_EOC:
sz   ADBZ             ; poll the SADC0 register ADBZ bit to detect end of A/D conversion
jmp  polling_EOC      ; continue polling
mov  a,SADOL          ; read low byte conversion result value
mov  SADOL_buffer,a   ; save result to user defined register
mov  a,SADOH          ; read high byte conversion result value
mov  SADOH_buffer,a   ; save result to user defined register
:
jmp  start_conversion ; start next A/D conversion
```

Example: using the interrupt method to detect the end of conversion

```
clr  ADE              ; disable ADC interrupt
mov  a,03H
mov  SADC1,a          ; select fSYS/8 as ADC clock
set  ADCEN
mov  a,02h            ; setup PBS0 to configure pin AN0
mov  PBS0,a
mov  a,20h
mov  SADC0,a          ; enable and connect AN0 channel to A/D converter
Start_conversion:
clr  START            ; high pulse on START bit to initiate conversion
set  START            ; reset A/D converter
clr  START            ; start A/D conversion
clr  ADF              ; clear ADC interrupt request flag
set  ADE              ; enable ADC interrupt
set  EMI              ; enable global interrupt
:
:
; ADC interrupt service routine
ADC_ISR:
mov  acc_stack,a      ; save ACC to user defined memory
mov  a,STATUS
mov  status_stack,a   ; save STATUS to user defined memory
:
:
mov  a,SADOL          ; read low byte conversion result value
```

```
mov  SADOL_buffer,a     ; save result to user defined register
mov  a,SADOH            ; read high byte conversion result value
mov  SADOH_buffer,a     ; save result to user defined register
:
:
EXIT_INT_ISR:
mov  a,status_stack
mov  STATUS,a           ; restore STATUS from user defined memory
mov  a,acc_stack        ; restore ACC from user defined memory
reti
```

I²C Serial Interface

The I²C interface is used to communicate with external peripheral devices such as sensors, EEPROM memory etc. Originally developed by Philips, it is a two line low speed serial interface for synchronous serial data transfer. The advantage of only two lines for communication, relatively simple communication protocol and the ability to accommodate multiple devices on the same bus has made it an extremely popular interface type for many applications.

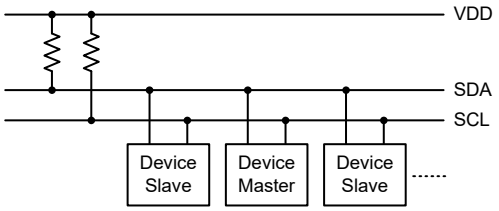

I²C Master Slave Bus Connection

I²C interface Operation

The I²C serial interface is a two line interface, a serial data line, SDA, and serial clock line, SCL. As many devices may be connected together on the same bus, their outputs are both open drain types. For this reason it is necessary that external pull-high resistors are connected to these outputs. Note that no chip select line exists, as each device on the I²C bus is identified by a unique address which will be transmitted and received on the I²C bus.

When two devices communicate with each other on the bidirectional I²C bus, one is known as the master device and one as the slave device. Both master and slave can transmit and receive data, however, it is the master device that has overall control of the bus. For the device, which only operates in slave mode, there are two methods of transferring data on the I²C bus, the slave transmit mode and the slave receive mode. The pull-high control function pin-shared with SCL/SDA pin is still applicable even if I²C device is activated and the related internal pull-high function could be controlled by its corresponding pull-high control register.

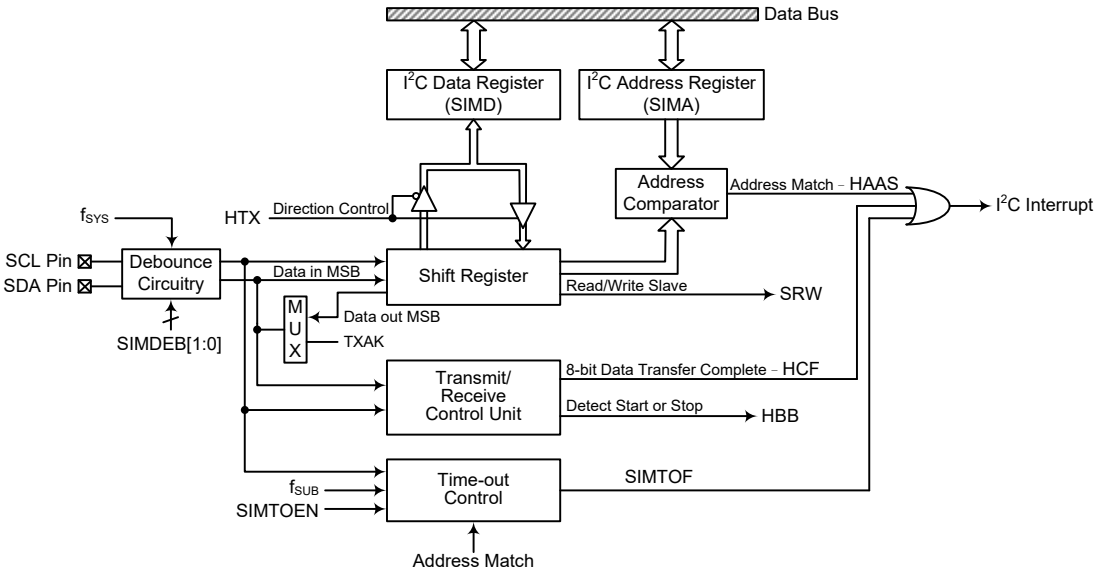

I²C Block Diagram

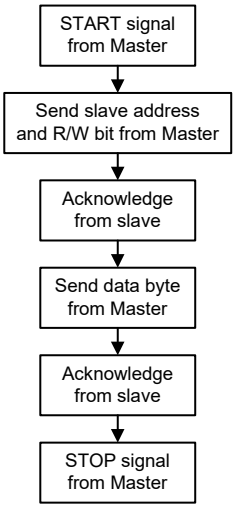

I²C Interface Operation

The SIMDEB1 and SIMDEB0 bits determine the debounce time of the I²C interface. This uses the system clock to in effect add a debounce time to the external clock to reduce the possibility of glitches on the clock line causing erroneous operation. The debounce time, if selected, can be chosen to be either 2 or 4 system clocks. To achieve the required I²C data transfer speed, there exists a relationship between the system clock, f_{SYS}, and the I²C debounce time. For either the I²C Standard or Fast mode operation, users must take care of the selected system clock frequency and the configured debounce time to match the criterion shown in the following table.

I²C Debounce Time Selection	I²C Standard Mode (100kHz)	I²C Fast Mode (400kHz)
No Debounce	f_{SYS}>2MHz	f_{SYS}>4MHz
2 system clock debounce	f_{SYS}>4MHz	f_{SYS}>8MHz
4 system clock debounce	f_{SYS}>4MHz	f_{SYS}>8MHz

I²C Minimum f_{SYS} Frequency Requirements

I²C Registers

There are three control registers associated with the I²C bus, SIMC0, SIMC1 and SIMTOC, one slave address register, SIMA, and one data register, SIMD.

Register Name	Bit							
	7	6	5	4	3	2	1	0
SIMC0	SIM2	SIM1	SIM0	—	SIMDEB1	SIMDEB0	SIMEN	D0
SIMC1	HCF	HAAS	HBB	HTX	TXAK	SRW	IAMWU	RXAK
SIMD	D7	D6	D5	D4	D3	D2	D1	D0
SIMA	SIMA6	SIMA5	SIMA4	SIMA3	SIMA2	SIMA1	SIMA0	D0
SIMTOC	SIMTOEN	SIMTOF	SIMTOS5	SIMTOS4	SIMTOS3	SIMTOS2	SIMTOS1	SIMTOS0

I²C Register List

I²C Data Register

The SIMD register is used to store the data being transmitted and received. Before the device writes data to the I²C bus, the actual data to be transmitted must be placed in the SIMD register. After the data is received from the I²C bus, the device can read it from the SIMD register. Any transmission or reception of data from the I²C bus must be made via the SIMD register.

- **SIMD Register**

Bit	7	6	5	4	3	2	1	0
Name	D7	D6	D5	D4	D3	D2	D1	D0
R/W	R/W	R/W	R/W	R/W	R/W	R/W	R/W	R/W
POR	x	x	x	x	x	x	x	x

"x": Unknown

Bit 7~0 **D7~D0**: I²C Bus data register bit 7 ~ bit 0

I²C Address Register

The SIMA register is the location where the 7-bit slave address of the slave device is stored. Bits 7~1 of the SIMA register define the device slave address. Bit 0 is not defined. When a master device, which is connected to the I²C bus, sends out an address, which matches the slave address in the SIMA register, the slave device will be selected.

- **SIMA Register**

Bit	7	6	5	4	3	2	1	0
Name	SIMA6	SIMA5	SIMA4	SIMA3	SIMA2	SIMA1	SIMA0	D0
R/W	R/W	R/W	R/W	R/W	R/W	R/W	R/W	R/W
POR	0	0	0	0	0	0	0	0

Bit 7~1 **SIMA6~SIMA0**: I²C slave address
SIMA6~SIMA0 is the I²C slave address bit 6~bit 0.

Bit 0 **D0**: Reserved bit, can be read or written by the application program.

I²C Control Register

There are also three control registers for the I²C interface, SIMC0, SIMC1 and SIMTOC. The register SIMC0 is used to control the enable/disable function and to select the I²C slave mode and debounce time. The SIMC1 register contains the relevant flags which are used to indicate the I²C communication status. The SIMTOC register is used to control the I²C bus time-out function which is described in the I²C Time-out Control section.

- **SIMC0 Register**

Bit	7	6	5	4	3	2	1	0
Name	SIM2	SIM1	SIM0	—	SIMDEB1	SIMDEB0	SIMEN	D0
R/W	R/W	R/W	R/W	—	R/W	R/W	R/W	R/W
POR	1	1	1	—	0	0	0	0

Bit 7~5 **SIM2~SIM0**: I²C Bus Operating Mode Control
000~101, 111: Unused mode
110: I²C slave mode
These bits setup the overall operating mode of the SIM function. Note that these bits should be fixed at "110".

Bit 4 Unimplemented, read as "0"

Bit 3~2 **SIMDEB1~SIMDEB0**: I²C Debounce Time Selection
00: No debounce
01: 2 system clock debounce
1x: 4 system clock debounce
These bits are used to select the I²C debounce time when the I²C interface function by setting the SIM2~SIM0 bits to "110".

Bit 1 **SIMEN**: I²C Enable Control
0: Disable
1: Enable
The bit is the overall on/off control for the I²C interface. When the SIMEN bit is cleared to zero to disable the I²C interface, the SDA and SCL lines will lose I²C function and the I²C operating current will be reduced to a minimum value. When the bit is high the I²C interface is enabled. If the interface is configured to operate as an I²C interface via the SIM2~SIM0 bits and the SIMEN bit changes from low to high, the contents of the I²C control bits such as HTX and TXAK will remain at the previous settings and should therefore be first initialised by the application program while the relevant I²C flags such as HCF, HAAS, HBB, SRW and RXAK will be set to their default states.

Bit 0 **D0**: Reserved, can not be used

- **SIMC1 Register**

Bit	7	6	5	4	3	2	1	0
Name	HCF	HAAS	HBB	HTX	TXAK	SRW	IAMWU	RXAK
R/W	R	R	R	R/W	R/W	R/W	R/W	R
POR	1	0	0	0	0	0	0	1

Bit 7 **HCF**: I²C Bus data transfer completion flag
0: Data is being transferred
1: Completion of an 8-bit data transfer
The HCF flag is the data transfer flag. This flag will be zero when data is being transferred. Upon completion of an 8-bit data transfer the flag will go high and an interrupt will be generated. Below is an example of the flow of a two-byte I²C data transfer.
First, the I²C slave device receives a start signal from I²C master and then HCF bit is automatically cleared to zero. Second, the I²C slave device finishes receiving the 1st data byte and then the HCF bit is automatically set high. Third, users read the 1st

data byte from SIMD register by the application program and then the HCF bit is automatically cleared to zero. Fourth, the I²C slave device finishes receiving the 2nd data byte and then HCF bit is automatically set high and so on. Finally, the I²C slave device receives a stop signal from the I²C master and then the HCF bit is automatically set high.

Bit 6 **HAAS**: I²C Bus address match flag
0: Not address match
1: Address match

The HAAS flag is the address match flag. This flag is used to determine if the slave device address is the same as the master transmit address. If the addresses match then this bit will be high, if there is no match then the flag will be low.

Bit 5 **HBB**: I²C Bus busy flag
0: I²C Bus is not busy
1: I²C Bus is busy

The HBB flag is the I²C busy flag. This flag will be "1" when the I²C bus is busy which will occur when a START signal is detected. The flag will be set to "0" when the bus is free which will occur when a STOP signal is detected.

Bit 4 **HTX**: I²C slave device transmitter/receiver selection
0: Slave device is the receiver
1: Slave device is the transmitter

Bit 3 **TXAK**: I²C bus transmit acknowledge flag
0: Slave send acknowledge flag
1: Slave does not send acknowledge flag

The TXAK bit is the transmit acknowledge flag. After the slave device receipt of 8-bits of data, this bit will be transmitted to the bus on the 9th clock from the slave device. The slave device must always clear the TXAK bit to "0" before further data is received.

Bit 2 **SRW**: I²C slave read/write flag
0: Slave device should be in receive mode
1: Slave device should be in transmit mode

The SRW flag is the I²C Slave Read/Write flag. This flag determines whether the master device wishes to transmit or receive data from the I²C bus. When the transmitted address and slave address is match, that is when the HAAS flag is set high, the slave device will check the SRW flag to determine whether it should be in transmit mode or receive mode. If the SRW flag is high, the master is requesting to read data from the bus, so the slave device should be in transmit mode. When the SRW flag is zero, the master will write data to the bus, therefore the slave device should be in receive mode to read this data.

Bit 1 **IAMWU**: I²C Address Match Wake-Up control
0: Disable
1: Enable

This bit should be set to 1 to enable the I²C address match wake up from the SLEEP or IDLE Mode. If the IAMWU bit has been set before entering either the SLEEP or IDLE mode to enable the I²C address match wake up, then this bit must be cleared to zero by the application program after wake-up to ensure correction device operation.

Bit 0 **RXAK**: I²C bus receive acknowledge flag
0: Slave receives acknowledge flag
1: Slave does not receive acknowledge flag

The RXAK flag is the receiver acknowledge flag. When the RXAK flag is "0", it means that a acknowledge signal has been received at the 9th clock, after 8 bits of data have been transmitted. When the slave device in the transmit mode, the slave device checks the RXAK flag to determine if the master receiver wishes to receive the next byte. The slave transmitter will therefore continue sending out data until the RXAK flag is "1". When this occurs, the slave transmitter will release the SDA line to allow the master to send a STOP signal to release the I²C Bus.

I²C Bus Communication

Communication on the I²C bus requires four separate steps, a START signal, a slave device address transmission, a data transmission and finally a STOP signal. When a START signal is placed on the I²C bus, all devices on the bus will receive this signal and be notified of the imminent arrival of data on the bus. The first seven bits of the data will be the slave address with the first bit being the MSB. If the address of the slave device matches that of the transmitted address, the HAAS bit in the SIMC1 register will be set and an I²C interrupt will be generated. After entering the interrupt service routine, the slave device must first check the condition of the HAAS and SIMTOF bits to determine whether the interrupt source originates from an address match, 8-bit data transfer completion or I²C bus time-out occurrence. During a data transfer, note that after the 7-bit slave address has been transmitted, the following bit, which is the 8th bit, is the read/write bit whose value will be placed in the SRW bit. This bit will be checked by the slave device to determine whether to go into transmit or receive mode. Before any transfer of data to or from the I²C bus, the microcontroller must initialise the bus, the following are steps to achieve this:

- Step 1
  Set the SIM2~SIM0 bits to “110” and SIMEN bit to “1” in the SIMC0 register to enable the I²C bus.
- Step 2
  Write the slave address of the device to the I²C bus address register SIMA.
- Step 3
  Set the SIME interrupt enable bit of the interrupt control register to enable the I²C interrupt.

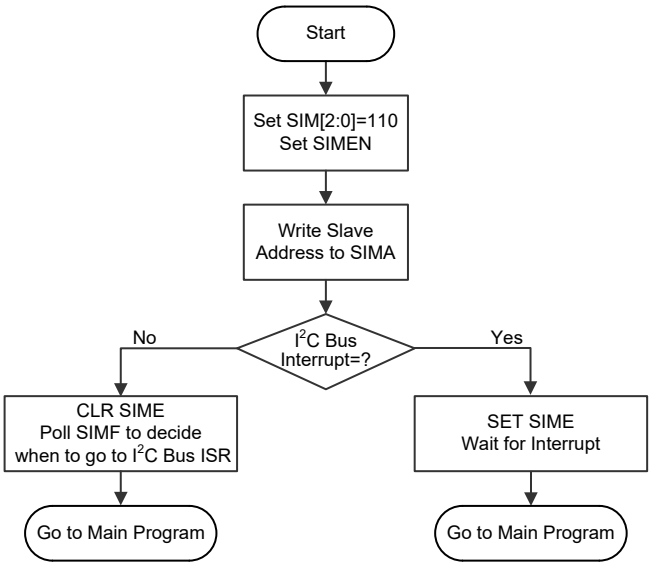

I²C Bus Initialisation Flow Chart

I²C Bus Start Signal

The START signal can only be generated by the master device connected to the I²C bus and not by the slave device. This START signal will be detected by all devices connected to the I²C bus. When detected, this indicates that the I²C bus is busy and therefore the HBB bit will be set. A START condition occurs when a high to low transition on the SDA line takes place when the SCL line remains high.

I²C Slave Address

The transmission of a START signal by the master will be detected by all devices on the I²C bus. To determine which slave device the master wishes to communicate with, the address of the slave device will be sent out immediately following the START signal. All slave devices, after receiving this 7-bit address data, will compare it with their own 7-bit slave address. If the address sent out by the master matches the internal address of the microcontroller slave device, then an internal I²C bus interrupt signal will be generated. The next bit following the address, which is the 8th bit, defines the read/write status and will be saved to the SRW bit of the SIMC1 register. The slave device will then transmit an acknowledge bit, which is a low level, as the 9th bit. The slave device will also set the status flag HAAS when the addresses match.

As an I²C bus interrupt signal can come from three sources, when the program enters the interrupt subroutine, the HAAS and SIMTOF bits should be examined to see whether the interrupt source has come from a matching slave address, the completion of a data byte transfer or the I²C bus time-out occurrence. When a slave address is matched, the device must be placed in either the transmit mode and then write data to the SIMD register, or in the receive mode where it must implement a dummy read from the SIMD register to release the SCL line.

I²C Bus Read/Write Signal

The SRW bit in the SIMC1 register defines whether the master device wishes to read data from the I²C bus or write data to the I²C bus. The slave device should examine this bit to determine if it is to be a transmitter or a receiver. If the SRW flag is “1” then this indicates that the master device wishes to read data from the I²C bus, therefore the slave device must be setup to send data to the I²C bus as a transmitter. If the SRW flag is “0” then this indicates that the master wishes to send data to the I²C bus, therefore the slave device must be setup to read data from the I²C bus as a receiver.

I²C Bus Slave Address Acknowledge Signal

After the master has transmitted a calling address, any slave device on the I²C bus, whose own internal address matches the calling address, must generate an acknowledge signal. The acknowledge signal will inform the master that a slave device has accepted its calling address. If no acknowledge signal is received by the master then a STOP signal must be transmitted by the master to end the communication. When the HAAS flag is high, the addresses have matched and the slave device must check the SRW flag to determine if it is to be a transmitter or a receiver. If the SRW flag is high, the slave device should be setup to be a transmitter so the HTX bit in the SIMC1 register should be set to “1”. If the SRW flag is low, then the microcontroller slave device should be setup as a receiver and the HTX bit in the SIMC1 register should be set to “0”.

I²C Bus Data and Acknowledge Signal

The transmitted data is 8-bits wide and is transmitted after the slave device has acknowledged receipt of its slave address. The order of serial bit transmission is the MSB first and the LSB last. After receipt of 8-bits of data, the receiver must transmit an acknowledge signal, level “0”, before it can receive the next data byte. If the slave transmitter does not receive an acknowledge bit signal from the master receiver, then the slave transmitter will release the SDA line to allow the master to send a STOP signal to release the I²C Bus. The corresponding data will be stored in the SIMD register. If setup as a transmitter, the slave device must first write the data to be transmitted into the SIMD register. If setup as a receiver, the slave device must read the transmitted data from the SIMD register.

When the slave receiver receives the data byte, it must generate an acknowledge bit, known as TXAK, on the 9th clock. The slave device, which is setup as a transmitter will check the RXAK bit in the SIMC1 register to determine if it is to send another data byte, if not then it will release the SDA line and await the receipt of a STOP signal from the master.

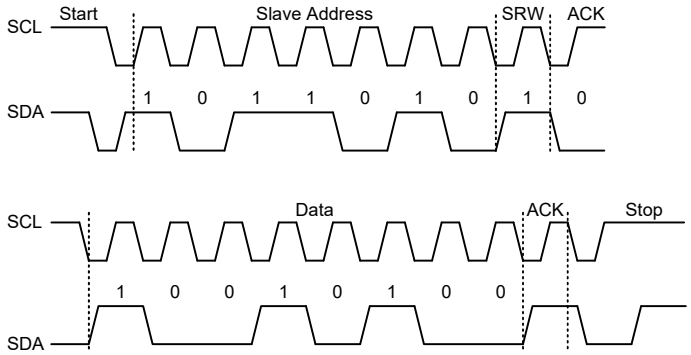

S=Start (1 bit)
SA=Slave Address (7 bits)
SR=SRW bit (1 bit)
M=Slave device send acknowledge bit (1 bit)
D=Data (8 bits)
A=ACK (RXAK bit for transmitter, TXAK bit for receiver, 1 bit)
P=Stop (1 bit)

S	SA	SR	M	D	A	D	A	……	S	SA	SR	M	D	A	D	A	……	P

I²C Communication Timing Diagram

Note: When a slave address is matched, the device must be placed in either the transmit mode and then write data to the SIMD register, or in the receive mode where it must implement a dummy read from the SIMD register to release the SCL line.

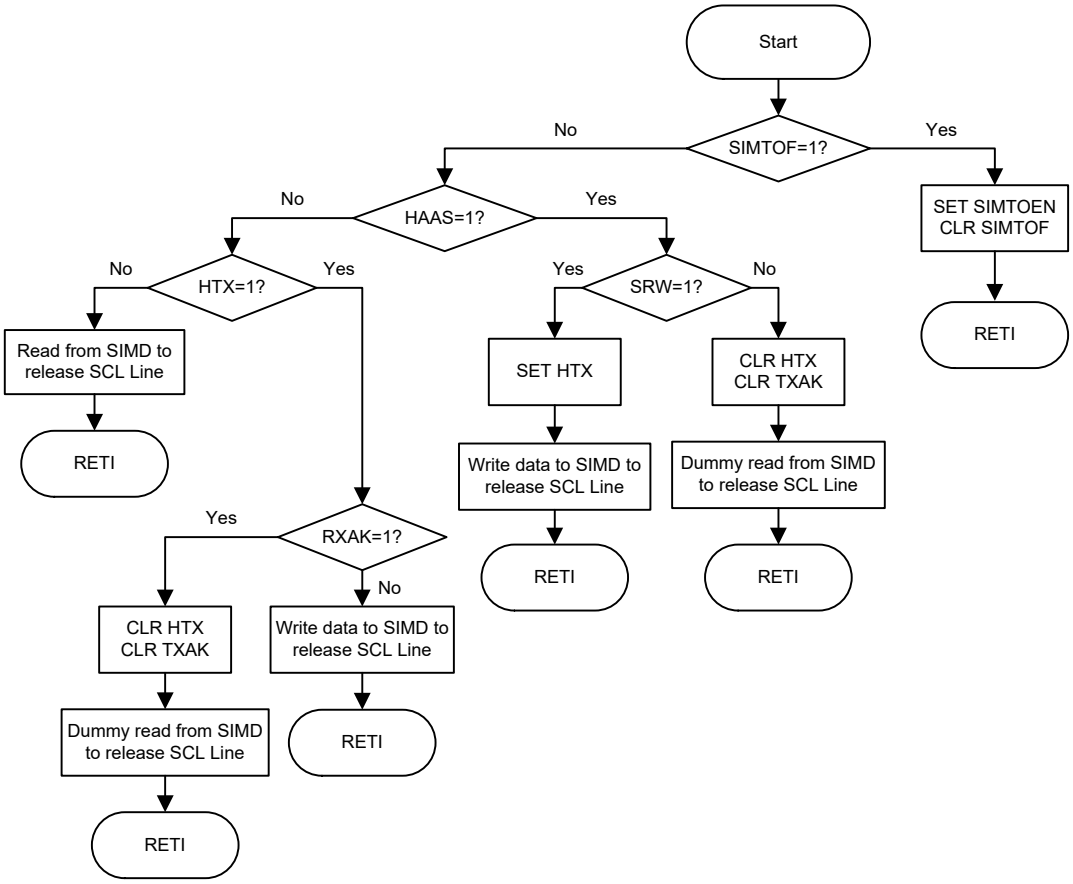

I²C Bus ISR Flow Chart

I²C Time-out Control

In order to reduce the I²C lockup problem due to reception of erroneous clock sources, a time-out function is provided. If the clock source connected to the I²C bus is not received for a while, then the I²C circuitry and registers will be reset after a certain time-out period. The time-out counter starts to count on an I²C bus "START" & "address match" condition, and is cleared by an SCL falling edge. Before the next SCL falling edge arrives, if the time elapsed is greater than the time-out period specified by the SIMTOC register, then a time-out condition will occur. The time-out function will stop when an I²C "STOP" condition occurs.

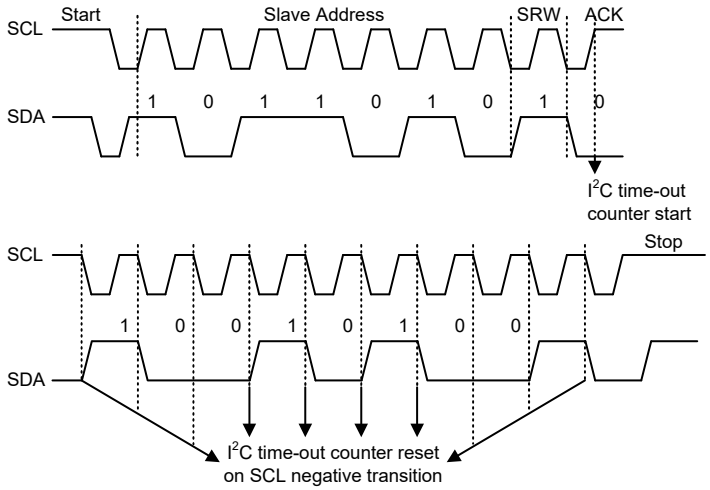

I²C Time-out

When an I²C time-out counter overflow occurs, the counter will stop and the SIMTOEN bit will be cleared to zero and the SIMTOF bit will be set high to indicate that a time-out condition has occurred. The time-out condition will also generate an interrupt which uses the I²C interrupt vector. When an I²C time-out occurs, the I²C internal circuitry will be reset and the registers will be reset into the following condition:

Registers	After I²C Time-out
SIMD, SIMA, SIMC0	No change
SIMC1	Reset to POR condition

I²C Register after Time-out

The SIMTOF flag can be cleared by the application program. There are 64 time-out period selections which can be selected using the SIMTOS bit field in the SIMTOC register. The time-out duration is calculated by the formula: $(1\sim64)\times(32/f_{SUB})$. This gives a time-out period which ranges from about 1ms to 64ms.

- **SIMTOC Register**

Bit	7	6	5	4	3	2	1	0
Name	SIMTOEN	SIMTOF	SIMTOS5	SIMTOS4	SIMTOS3	SIMTOS2	SIMTOS1	SIMTOS0
R/W	R/W	R/W	R/W	R/W	R/W	R/W	R/W	R/W
POR	0	0	0	0	0	0	0	0

Bit 7 **SIMTOEN**: I²C Time-out function control
0: Disable
1: Enable

Bit 6 **SIMTOF**: I^2C Time-out flag
0: No time-out occurred
1: Time-out occurred
This bit is set high when time-out occurs and can only be cleared to zero by application program.

Bit 5~0 **SIMTOS5~SIMTOS0**: I^2C Time-out period selection
I^2C Time-out clock source is $f_{SUB}/32$.
I^2C time-out time is equal to (SIMTOS[5:0]+1)×(32/f_{SUB})

Low Voltage Detector – LVD

The device has a Low Voltage Detector function, also known as LVD. This enables the device to monitor the power supply voltage, V_{DD}, and provide a warning signal should it fall below a certain level. This function may be especially useful in battery applications where the supply voltage will gradually reduce as the battery ages, as it allows an early warning battery low signal to be generated. The Low Voltage Detector also has the capability of generating an interrupt signal.

LVD Register

The Low Voltage Detector function is controlled using a single register with the name LVDC. Three bits in this register, VLVD2~VLVD0, are used to select one of eight fixed voltages below which a low voltage condition will be determined. A low voltage condition is indicated when the LVDO bit is set. If the LVDO bit is low, this indicates that the V_{DD} voltage is above the preset low voltage value. The LVDEN bit is used to control the overall on/off function of the low voltage detector. Setting the bit high will enable the low voltage detector. Clearing the bit to zero will switch off the internal low voltage detector circuits. As the low voltage detector will consume a certain amount of power, it may be desirable to switch off the circuit when not in use, an important consideration in power sensitive battery powered applications.

- **LVDC Register**

Bit	7	6	5	4	3	2	1	0
Name	—	—	LVDO	LVDEN	—	VLVD2	VLVD1	VLVD0
R/W	—	—	R	R/W	—	R/W	R/W	R/W
POR	—	—	0	0	—	0	0	0

Bit 7~6 Unimplemented, read as “0”

Bit 5 **LVDO**: LVD output flag
0: No Low Voltage detected
1: Low Voltage detected

Bit 4 **LVDEN**: Low Voltage Detector Enable control
0: Disable
1: Enable

Bit 3 Unimplemented, read as “0”

Bit 2~0 **VLVD2~VLVD0**: LVD Voltage selection
000: 1.8V
001: 2.0V
010: 2.4V
011: 2.7V
100: 3.0V
101: 3.3V
110: 3.6V
111: 4.0V

LVD Operation

The Low Voltage Detector function operates by comparing the power supply voltage, V_{DD}, with a pre-specified voltage level stored in the LVDC register. This has a range of between 1.8V and 4.0V. When the power supply voltage, V_{DD}, falls below this pre-determined value, the LVDO bit will be set high indicating a low power supply voltage condition. When the device is in the SLEEP mode, the low voltage detector will be disabled even if the LVDEN bit is high. After enabling the Low Voltage Detector, a time delay t_{LVDS} should be allowed for the circuitry to stabilise before reading the LVDO bit. Note also that as the V_{DD} voltage may rise and fall rather slowly, at the voltage nears that of V_{LVD}, there may be multiple bit LVDO transitions.

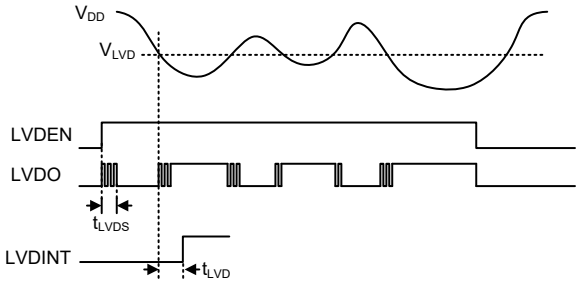

LVD Operation

The Low Voltage Detector also has its own interrupt which is contained within one of the Multi-function interrupts, providing an alternative means of low voltage detection, in addition to polling the LVDO bit. The interrupt will only be generated after a delay of t_{LVD} after the LVDO bit has been set high by a low voltage condition, i.e., V_{DD} falls below the preset LVD voltage. In this case, the LVF interrupt request flag will be set, causing an interrupt to be generated. This will cause the device to wake-up from the IDLE Mode, however if the Low Voltage Detector wake up function is not required then the LVF flag should be first set high before the device enters the IDLE Mode.

Interrupts

Interrupts are an important part of any microcontroller system. When an external event or an internal function such as a Timer Module or an A/D converter requires microcontroller attention, their corresponding interrupt will enforce a temporary suspension of the main program allowing the microcontroller to direct attention to their respective needs. The device contains several external interrupt and internal interrupt functions. The external interrupts are generated by the action of the external INT0 and INT1 pins, while the internal interrupts are generated by various internal functions such as TMs, Time Bases, LVD, EEPROM, I^2C Bus and the A/D converter, etc.

The various interrupt enable bits, together with their associated request flags, are shown in the accompanying diagrams with their order of priority. Some interrupt sources have their own individual vector while others share the same multi-function interrupt vector.

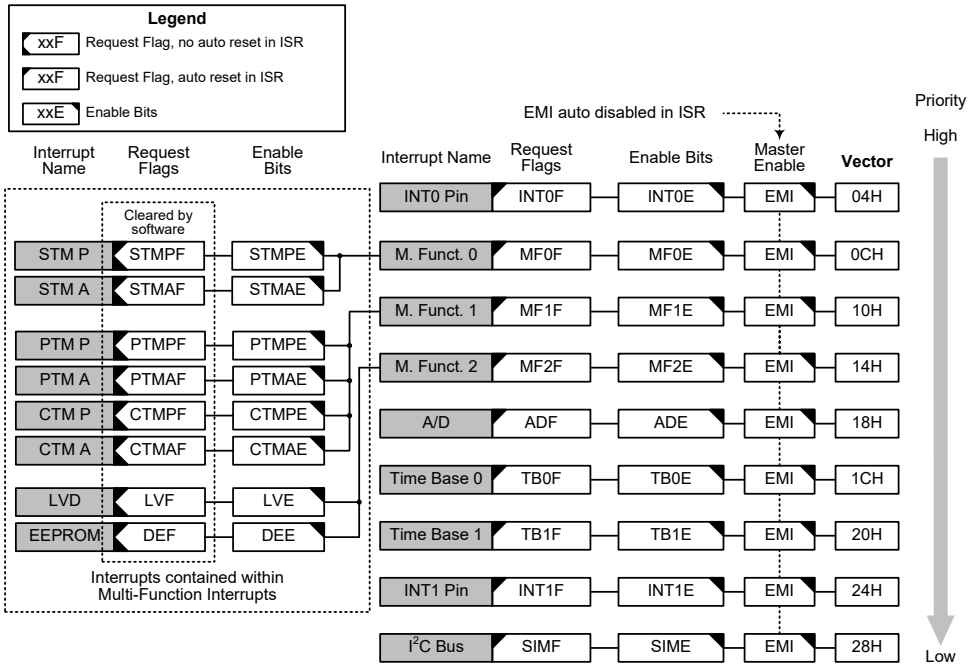

Interrupt Structure

Interrupt Registers

Overall interrupt control, which basically means the setting of request flags when certain microcontroller conditions occur and the setting of interrupt enable bits by the application program, is controlled by a series of registers, located in the Special Purpose Data Memory. The registers fall into three categories. The first is the INTC0~INTC2 registers which setup the primary interrupts, the second is the MFI0~MFI2 registers which setup the Multi-function interrupts. Finally there is an INTEG register which setup the external interrupt trigger edge type.

Each register contains a number of enable bits to enable or disable individual registers as well as interrupt flags to indicate the presence of an interrupt request. The naming convention of these follows a specific pattern. First is listed an abbreviated interrupt type, then the (optional) number of that interrupt followed by either an "E" for enable/ disable bit or "F" for request flag.

Function	Enable Bit	Request Flag	Notes
Global	EMI	—	—
INTn Pins	INTnE	INTnF	n=0~1
Multi-function	MFnE	MFnF	n=0~2
A/D Converter	ADE	ADF	—
Time Bases	TBnE	TBnF	n=0~1
I²C Serial Communication Interface	SIME	SIMF	—
LVD	LVE	LVF	—
EEPROM	DEE	DEF	—
CTM	CTMPE	CTMPF	—
	CTMAE	CTMAF	—
STM	STMPE	STMPF	—
	STMAE	STMAF	—
PTM	PTMPE	PTMPF	—
	PTMAE	PTMAF	—

Interrupt Register Bit Naming Conventions

Register Name	Bit							
	7	6	5	4	3	2	1	0
INTEG	—	—	—	—	INT1S1	INT1S0	INT0S1	INT0S0
INTC0	—	MF0F	D5	INT0F	MF0E	D2	INT0E	EMI
INTC1	TB0F	ADF	MF2F	MF1F	TB0E	ADE	MF2E	MF1E
INTC2	D7	SIMF	INT1F	TB1F	D3	SIME	INT1E	TB1E
MFI0	—	—	STMAF	STMPF	—	—	STMAE	STMPE
MFI1	CTMAF	CTMPF	PTMAF	PTMPF	CTMAE	CTMPE	PTMAE	PTMPE
MFI2	—	—	DEF	LVF	—	—	DEE	LVE

Interrupt Register List

- **INTEG Register**

Bit	7	6	5	4	3	2	1	0
Name	—	—	—	—	INT1S1	INT1S0	INT0S1	INT0S0
R/W	—	—	—	—	R/W	R/W	R/W	R/W
POR	—	—	—	—	0	0	0	0

Bit 7~4 Unimplemented, read as “0”

Bit 3~2 **INT1S1~INT1S0**: Interrupt edge control for INT1 pin
00: Disable
01: Rising edge
10: Falling edge
11: Rising and falling edges

Bit 1~0 **INT0S1~INT0S0**: Interrupt edge control for INT0 pin
00: Disable
01: Rising edge
10: Falling edge
11: Rising and falling edges

- **INTC0 Register**

Bit	7	6	5	4	3	2	1	0
Name	—	MF0F	D5	INT0F	MF0E	D2	INT0E	EMI
R/W	—	R/W	R/W	R/W	R/W	R/W	R/W	R/W
POR	—	0	0	0	0	0	0	0

Bit 7 Unimplemented, read as “0”

Bit 6 **MF0F**: Multi-function 0 interrupt request flag
0: No request
1: Interrupt request

Bit 5 **D5**: Reserved, can not be used

Bit 4 **INT0F**: INT0 interrupt request flag
0: No request
1: Interrupt request

Bit 3 **MF0E**: Multi-function 0 interrupt control
0: Disable
1: Enable

Bit 2 **D2**: Reserved, can not be used

Bit 1 **INT0E**: INT0 interrupt control
0: Disable
1: Enable

Bit 0 **EMI**: Global interrupt control
0: Disable
1: Enable

• **INTC1 Register**

Bit	7	6	5	4	3	2	1	0
Name	TB0F	ADF	MF2F	MF1F	TB0E	ADE	MF2E	MF1E
R/W	R/W	R/W	R/W	R/W	R/W	R/W	R/W	R/W
POR	0	0	0	0	0	0	0	0

Bit 7 **TB0F**: Time Base 0 interrupt request flag
0: No request
1: Interrupt request

Bit 6 **ADF**: A/D Converter interrupt request flag
0: No request
1: Interrupt request

Bit 5 **MF2F**: Multi-function 2 interrupt request flag
0: No request
1: Interrupt request

Bit 4 **MF1F**: Multi-function 1 interrupt request flag
0: No request
1: Interrupt request

Bit 3 **TB0E**: Time Base 0 interrupt control
0: Disable
1: Enable

Bit 2 **ADE**: A/D Converter interrupt control
0: Disable
1: Enable

Bit 1 **MF2E**: Multi-function 2 interrupt control
0: Disable
1: Enable

Bit 0 **MF1E**: Multi-function 1 interrupt control
0: Disable
1: Enable

• **INTC2 Register**

Bit	7	6	5	4	3	2	1	0
Name	D7	SIMF	INT1F	TB1F	D3	SIME	INT1E	TB1E
R/W	R/W	R/W	R/W	R/W	R/W	R/W	R/W	R/W
POR	0	0	0	0	0	0	0	0

Bit 7 **D7**: Reserved, can not be used

Bit 6 **SIMF**: I^2C Bus interrupt request flag
0: No request
1: Interrupt request

Bit 5 **INT1F**: INT1 interrupt request flag
0: No request
1: Interrupt request

Bit 4 **TB1F**: Time Base 1 interrupt request flag
0: No request
1: Interrupt request

Bit 3 **D3**: Reserved, can not be used

Bit 2 **SIME**: I^2C Bus interrupt control
0: Disable
1: Enable

Bit 1 **INT1E**: INT1 interrupt control
0: Disable
1: Enable

Bit 0 **TB1E**: Time Base 1 interrupt control
0: Disable
1: Enable

• **MFI0 Register**

Bit	7	6	5	4	3	2	1	0
Name	—	—	STMAF	STMPF	—	—	STMAE	STMPE
R/W	—	—	R/W	R/W	—	—	R/W	R/W
POR	—	—	0	0	—	—	0	0

Bit 7~6 Unimplemented, read as "0"

Bit 5 **STMAF**: STM Comparator A match interrupt request flag
0: No request
1: Interrupt request
Note that this bit must be cleared to zero by the application program when the interrupt is serviced.

Bit 4 **STMPF**: STM Comparator P match interrupt request flag
0: No request
1: Interrupt request
Note that this bit must be cleared to zero by the application program when the interrupt is serviced.

Bit 3~2 Unimplemented, read as "0"

Bit 1 **STMAE**: STM Comparator A match interrupt control
0: Disable
1: Enable

Bit 0 **STMPE**: STM Comparator P match interrupt control
0: Disable
1: Enable

• **MFI1 Register**

Bit	7	6	5	4	3	2	1	0
Name	CTMAF	CTMPF	PTMAF	PTMPF	CTMAE	CTMPE	PTMAE	PTMPE
R/W	R/W	R/W	R/W	R/W	R/W	R/W	R/W	R/W
POR	0	0	0	0	0	0	0	0

Bit 7 **CTMAF**: CTM Comparator A match interrupt request flag
0: No request
1: Interrupt request
Note that this bit must be cleared to zero by the application program when the interrupt is serviced.

Bit 6 **CTMPF**: CTM Comparator P match interrupt request flag
0: No request
1: Interrupt request
Note that this bit must be cleared to zero by the application program when the interrupt is serviced.

Bit 5 **PTMAF**: PTM Comparator A match interrupt request flag
0: No request
1: Interrupt request
Note that this bit must be cleared to zero by the application program when the interrupt is serviced.

Bit 4 **PTMPF**: PTM Comparator P match interrupt request flag
0: No request
1: Interrupt request
Note that this bit must be cleared to zero by the application program when the interrupt is serviced.

Bit 3 **CTMAE**: CTM Comparator A match interrupt control
0: Disable
1: Enable

Bit 2 **CTMPE**: CTM Comparator P match interrupt control
0: Disable
1: Enable

Bit 1 **PTMAE**: PTM Comparator A match interrupt control
0: Disable
1: Enable

Bit 0 **PTMPE**: PTM Comparator P match interrupt control
0: Disable
1: Enable

- **MFI2 Register**

Bit	7	6	5	4	3	2	1	0
Name	—	—	DEF	LVF	—	—	DEE	LVE
R/W	—	—	R/W	R/W	—	—	R/W	R/W
POR	—	—	0	0	—	—	0	0

Bit 7~6 Unimplemented, read as “0”

Bit 5 **DEF**: Data EEPROM interrupt request flag
0: No request
1: Interrupt request
Note that this bit must be cleared to zero by the application program when the interrupt is serviced.

Bit 4 **LVF**: LVD interrupt request flag
0: No request
1: Interrupt request
Note that this bit must be cleared to zero by the application program when the interrupt is serviced.

Bit 3~2 Unimplemented, read as “0”

Bit 1 **DEE**: Data EEPROM interrupt control
0: Disable
1: Enable

Bit 0 **LVE**: LVD interrupt control
0: Disable
1: Enable

Interrupt Operation

When the conditions for an interrupt event occur, such as a TM Comparator P or Comparator A match or A/D conversion completion etc., the relevant interrupt request flag will be set. Whether the request flag actually generates a program jump to the relevant interrupt vector is determined by the condition of the interrupt enable bit. If the enable bit is set high then the program will jump to its relevant vector, if the enable bit is zero then although the interrupt request flag is set an actual interrupt will not be generated and the program will not jump to the relevant interrupt vector. The global interrupt enable bit, if cleared to zero, will disable all interrupts.

When an interrupt is generated, the Program Counter, which stores the address of the next instruction to be executed, will be transferred onto the stack. The Program Counter will then be loaded with a new address which will be the value of the corresponding interrupt vector. The microcontroller will then fetch its next instruction from this interrupt vector. The instruction at this vector will usually be a “JMP” which will jump to another section of program which is known as the interrupt service routine. Here is located the code to control the appropriate interrupt. The interrupt service routine must be terminated with a “RETI”, which retrieves the original Program Counter address from the stack and allows the microcontroller to continue with normal execution at the point where the interrupt occurred.

Once an interrupt subroutine is serviced, all the other interrupts will be blocked, as the global interrupt enable bit, EMI bit will be cleared automatically. This will prevent any further interrupt nesting from occurring. However, if other interrupt requests occur during this interval, although the interrupt will not be immediately serviced, the request flag will still be recorded.

If an interrupt requires immediate servicing while the program is already in another interrupt service routine, the EMI bit should be set after entering the routine, to allow interrupt nesting. If the stack is full, the interrupt request will not be acknowledged, even if the related interrupt is enabled, until the Stack Pointer is decremented. If immediate service is desired, the stack must be prevented from becoming full. In case of simultaneous requests, the Interrupt Structure diagram shows the priority that is applied. All of the interrupt request flags when set will wake-up the device if it is in SLEEP or IDLE Mode, however to prevent a wake-up from occurring the corresponding flag should be set before the device is in SLEEP or IDLE Mode.

External Interrupt

The external interrupts are controlled by signal transitions on the pins INT0~INT1. An external interrupt request will take place when the external interrupt request flags, INT0F~INT1F, are set, which will occur when a transition, whose type is chosen by the edge select bits, appears on the external interrupt pins. To allow the program to branch to its respective interrupt vector address, the global interrupt enable bit, EMI, and respective external interrupt enable bit, INT0E~INT1E, must first be set. Additionally the correct interrupt edge type must be selected using the INTEG register to enable the external interrupt function and to choose the trigger edge type. As the external interrupt pins are pin-shared with I/O pins, they can only be configured as external interrupt pins if their external interrupt enable bit in the corresponding interrupt register has been set and the external interrupt pin is selected by the corresponding pin-shared function selection bits. The pin must also be setup as an input by setting the corresponding bit in the port control register. When the interrupt is enabled, the stack is not full and the correct transition type appears on the external interrupt pin, a subroutine call to the external interrupt vector, will take place. When the interrupt is serviced, the external interrupt request flags, INT0F~INT1F, will be automatically reset and the EMI bit will be automatically cleared to disable other interrupts. Note that any pull-high resistor selections on the external interrupt pins will remain valid even if the pin is used as an external interrupt input.

The INTEG register is used to select the type of active edge that will trigger the external interrupt. A choice of either rising or falling or both edge types can be chosen to trigger an external interrupt. Note that the INTEG register can also be used to disable the external interrupt function.

Multi-function Interrupts

Within the device there are three Multi-function interrupts. Unlike the other independent interrupts, these interrupts have no independent source, but rather are formed from other existing interrupt sources, namely the TM interrupts, LVD interrupt and EEPROM erase or write operation interrupt.

A Multi-function interrupt request will take place when any of the Multi-function interrupt request flags MFnF are set. The Multi-function interrupt flag will be set when any of their included functions generate an interrupt request flag. When the Multi-function interrupt is enabled and the stack is not full, and any one of the interrupts contained within each of the Multi-function interrupt occurs, a subroutine call to the related Multi-function interrupt vector will take place. When the interrupt is serviced, the related Multi-function request flag will be automatically reset and the EMI bit will be automatically cleared to disable other interrupts.

However, it must be noted that, although the Multi-function Interrupt request flags will be automatically reset when the interrupt is serviced, the request flags from the original source of the Multi-function interrupt will not be automatically reset and must be manually reset by the application program.

A/D Converter Interrupt

The A/D Converter Interrupt is controlled by the termination of an A/D conversion process. An A/D Converter Interrupt request will take place when the A/D Converter Interrupt request flag, ADF, is set, which occurs when the A/D conversion process finishes. To allow the program to branch to its respective interrupt vector address, the global interrupt enable bit, EMI, and A/D Interrupt enable bit, ADE, must first be set. When the interrupt is enabled, the stack is not full and the A/D conversion process has ended, a subroutine call to the A/D Converter Interrupt vector, will take place. When the interrupt is serviced, the A/D Converter Interrupt flag, ADF, will be automatically cleared. The EMI bit will also be automatically cleared to disable other interrupts.

Time Base Interrupts

The function of the Time Base Interrupt is to provide regular time signal in the form of an internal interrupt. They are controlled by the overflow signals from their respective timer functions. When these happen their respective interrupt request flags, TB0F or TB1F, will be set. To allow the program to branch to their respective interrupt vector addresses, the global interrupt enable bit, EMI and Time Base enable bit, TB0E or TB1E, must first be set. When the interrupt is enabled, the stack is not full and the Time Base overflows, a subroutine call to their respective vector locations will take place. When the interrupt is serviced, the respective interrupt request flag, TB0F or TB1F, will be automatically reset and the EMI bit will be cleared to disable other interrupts.

The purpose of the Time Base Interrupt is to provide an interrupt signal at fixed time periods. Their clock sources f_{PSC0} or f_{PSC1}, originate from the internal clock source f_{SYS}, $f_{SYS}/4$ or f_{SUB} and then passes through a divider, the division ratio of which is selected by programming the appropriate bits in the TB0C or TB1C register to obtain longer interrupt periods whose value ranges. The clock source which in turn controls the Time Base interrupt period is selected using the CLKSEL0[1:0] and CLKSEL1[1:0] bits in the PSC0R and PSC1R register respectively.

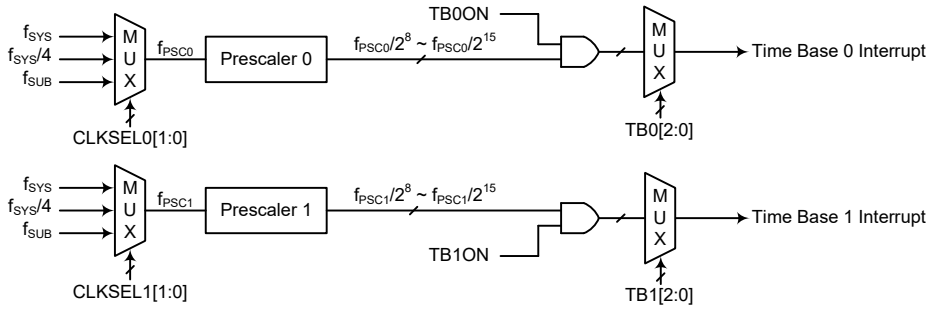

Time Base Interrupts

- **PSC0R Register**

Bit	7	6	5	4	3	2	1	0
Name	—	—	—	—	—	—	CLKSEL01	CLKSEL00
R/W	—	—	—	—	—	—	R/W	R/W
POR	—	—	—	—	—	—	0	0

Bit 7~2 Unimplemented, read as "0"

Bit 1~0 **CLKSEL01~CLKSEL00**: Prescaler 0 clock source selection
00: f_{SYS}
01: $f_{SYS}/4$
1x: f_{SUB}

- **PSC1R Register**

Bit	7	6	5	4	3	2	1	0
Name	—	—	—	—	—	—	CLKSEL11	CLKSEL10
R/W	—	—	—	—	—	—	R/W	R/W
POR	—	—	—	—	—	—	0	0

Bit 7~2 Unimplemented, read as "0"

Bit 1~0 **CLKSEL11~CLKSEL10**: Prescaler 1 clock source selection
00: f_{SYS}
01: $f_{SYS}/4$
1x: f_{SUB}

- **TB0C Register**

Bit	7	6	5	4	3	2	1	0
Name	TB0ON	—	—	—	—	TB02	TB01	TB00
R/W	R/W	—	—	—	—	R/W	R/W	R/W
POR	0	—	—	—	—	0	0	0

Bit 7 TB0ON: Time Base 0 Enable Control
0: Disable
1: Enable

Bit 6~3 Unimplemented, read as "0"

Bit 2~0 **TB02~TB00**: Time Base 0 time-out period selection
000: $2^8/f_{PSC0}$
001: $2^9/f_{PSC0}$
010: $2^{10}/f_{PSC0}$
011: $2^{11}/f_{PSC0}$
100: $2^{12}/f_{PSC0}$
101: $2^{13}/f_{PSC0}$
110: $2^{14}/f_{PSC0}$
111: $2^{15}/f_{PSC0}$

• **TB1C Register**

Bit	7	6	5	4	3	2	1	0
Name	TB1ON	—	—	—	—	TB12	TB11	TB10
R/W	R/W	—	—	—	—	R/W	R/W	R/W
POR	0	—	—	—	—	0	0	0

Bit 7 **TB1ON**: Time Base 1 Enable Control
0: Disable
1: Enable

Bit 6~3 Unimplemented, read as "0"

Bit 2~0 **TB12~TB10**: Time Base 1 time-out period selection
000: $2^8/f_{PSC1}$
001: $2^9/f_{PSC1}$
010: $2^{10}/f_{PSC1}$
011: $2^{11}/f_{PSC1}$
100: $2^{12}/f_{PSC1}$
101: $2^{13}/f_{PSC1}$
110: $2^{14}/f_{PSC1}$
111: $2^{15}/f_{PSC1}$

TM Interrupts

The Compact, Standard and Periodic TMs each have two interrupts, one comes from the comparator A match situation and the other comes from the comparator P match situation. All of the TM interrupts are contained within the Multi-function Interrupts. For all of the TM types there are two interrupt request flags and two enable control bits. A TM interrupt request will take place when any of the TM request flags are set, a situation which occurs when a TM comparator P or A match situation happens.

To allow the program to branch to its respective interrupt vector address, the global interrupt enable bit, EMI, respective TM Interrupt enable bit, and relevant Multi-function Interrupt enable bit, MFnE, must first be set. When the interrupt is enabled, the stack is not full and a TM comparator match situation occurs, a subroutine call to the relevant Multi-function Interrupt vector locations, will take place. When the TM interrupt is serviced, the EMI bit will be automatically cleared to disable other interrupts. However, only the related MFnF flag will be automatically cleared. As the TM interrupt request flags will not be automatically cleared, they have to be cleared by the application program.

I²C Bus Interrupt

A I²C Interrupt request will take place when the I²C Interrupt request flag, SIMF, is set, which occurs when a byte of data has been received or transmitted by the I²C interface, an I²C slave address match or I²C bus time-out occurrence. To allow the program to branch to its respective interrupt vector address, the global interrupt enable bit, EMI and the Serial Interface Interrupt enable bit, SIME, must first be set. When the interrupt is enabled, the stack is not full and any of the above described situations occurs, a subroutine call to the respective I²C Interrupt vector, will take place. When the Serial Interface Interrupt is serviced, the SIMF flag will also be automatically cleared. The EMI bit will also be automatically cleared to disable other interrupts.

LVD Interrupt

The Low Voltage Detector Interrupt is contained within the Multi-function Interrupt. An LVD Interrupt request will take place when the LVD Interrupt request flag, LVF, is set, which occurs when the Low Voltage Detector function detects a low power supply voltage. To allow the program to branch to its respective interrupt vector address, the global interrupt enable bit, EMI, Low Voltage Interrupt enable bit, LVE, and associated Multi-function interrupt enable bit, must first be set. When

the interrupt is enabled, the stack is not full and a low voltage condition occurs, a subroutine call to the Multi-function Interrupt vector, will take place. When the Low Voltage Interrupt is serviced, the EMI bit will be automatically cleared to disable other interrupts. However, only the Multi-function interrupt request flag will be also automatically cleared. As the LVF flag will not be automatically cleared, it has to be cleared by the application program.

EEPROM Interrupt

The EEPROM Interrupt is contained within the Multi-function Interrupt. An EEPROM Interrupt request will take place when the EEPROM Interrupt request flag, DEF, is set, which occurs when an EEPROM Erase or Write cycle ends. To allow the program to branch to its respective interrupt vector address, the global interrupt enable bit, EMI, EEPROM Interrupt enable bit, DEE, and associated Multi-function interrupt enable bit must first be set. When the interrupt is enabled, the stack is not full and an EEPROM Erase or Write cycle ends, a subroutine call to the respective Multi-function Interrupt vector will take place. When the EEPROM Interrupt is serviced, the EMI bit will be automatically cleared to disable other interrupts. However, only the Multi-function interrupt request flag will be automatically cleared. As the DEF flag will not be automatically cleared, it has to be cleared by the application program.

Interrupt Wake-up Function

Each of the interrupt functions has the capability of waking up the microcontroller when in the SLEEP or IDLE Mode. A wake-up is generated when an interrupt request flag changes from low to high and is independent of whether the interrupt is enabled or not. Therefore, even though these device is in the SLEEP or IDLE Mode and its system oscillator stopped, situations such as external edge transitions on the external interrupt pins, a low power supply voltage or comparator input change may cause their respective interrupt flag to be set high and consequently generate an interrupt. Care must therefore be taken if spurious wake-up situations are to be avoided. If an interrupt wake-up function is to be disabled then the corresponding interrupt request flag should be set high before the device enters the SLEEP or IDLE Mode. The interrupt enable bits have no effect on the interrupt wake-up function.

Programming Considerations

By disabling the relevant interrupt enable bits, a requested interrupt can be prevented from being serviced, however, once an interrupt request flag is set, it will remain in this condition in the interrupt register until the corresponding interrupt is serviced or until the request flag is cleared by the application program.

Where a certain interrupt is contained within a Multi-function interrupt, then when the interrupt service routine is executed, as only the Multi-function interrupt request flags, MFnF, will be automatically cleared, the individual request flag for the function needs to be cleared by the application program.

It is recommended that programs do not use the “CALL” instruction within the interrupt service subroutine. Interrupts often occur in an unpredictable manner or need to be serviced immediately. If only one stack is left and the interrupt is not well controlled, the original control sequence will be damaged once a CALL subroutine is executed in the interrupt subroutine.

Every interrupt has the capability of waking up the microcontroller when it is in SLEEP or IDLE Mode, the wake up being generated when the interrupt request flag changes from low to high. If it is required to prevent a certain interrupt from waking up the microcontroller then its respective request flag should be first set high before enter SLEEP or IDLE Mode.

As only the Program Counter is pushed onto the stack, then when the interrupt is serviced, if the contents of the accumulator, status register or other registers are altered by the interrupt service program, their contents should be saved to the memory at the beginning of the interrupt service routine.

To return from an interrupt subroutine, either a RET or RETI instruction may be executed. The RETI instruction in addition to executing a return to the main program also automatically sets the EMI bit high to allow further interrupts. The RET instruction however only executes a return to the main program leaving the EMI bit in its present zero state and therefore disabling the execution of further interrupts.

Accumulative Cell Voltage Monitor

The Accumulative Cell Voltage Monitor is designed to monitor an accumulative voltage from 1 to N and outputs the divide-by-N voltage to the analog multiplexer. Each divided accumulative cell voltage from pin VBATn can be observed sequentially and measured by using the internal A/D converter, which is only required to externally connect the VOUT pin to the internal A/D converter channels.

The Accumulative Cell Voltage Monitor can directly drive external power N-type MOSFETs to control charge and discharge by charge and discharge gate drivers. The integrated battery balance circuitry provides a cell balance current without the need of external transistors.

An integrated regulator provides a 5V supply to the MCU with a 50mA driving current capability and which has ±1% accuracy. The voltage regulator, cell voltage monitor and gate drivers are shut down with an ultra-low standby current of 0.1μA when the device is in the Sleep mode. When the HVWK pin is triggered by a voltage greater than its threshold, the device will return to the standby state.

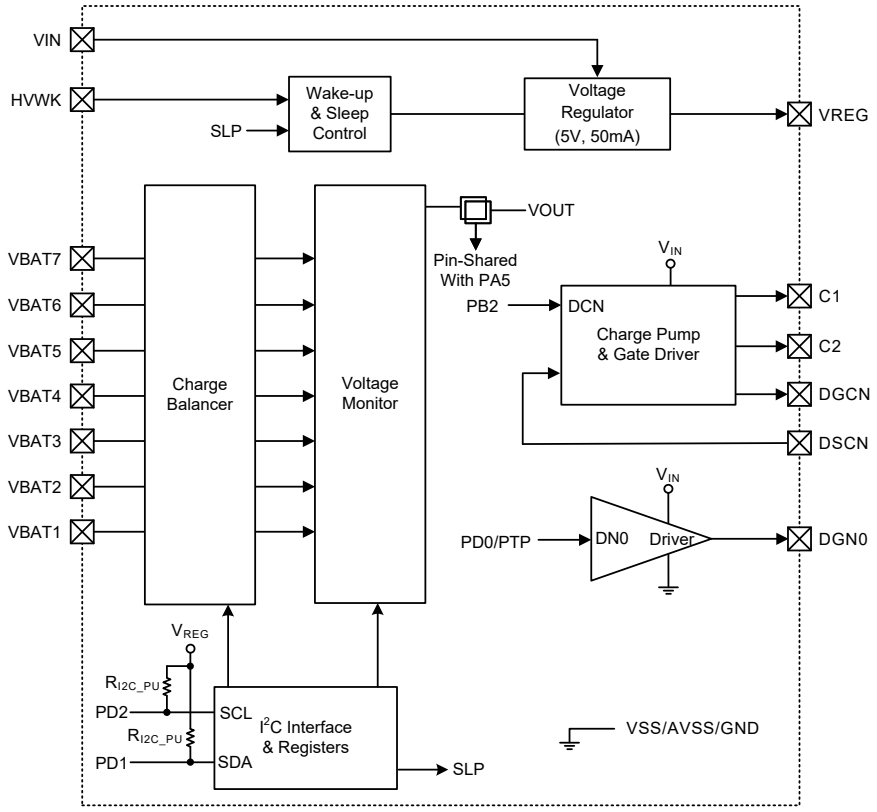

Accumulative Cell Voltage Monitor Block Diagram

I²C Serial Interface Functional Description

The device includes an I²C serial interface. The I²C bus is used for bidirectional, two-line communication between different ICs or modules. The two lines are a serial data line, SDA, and a serial clock line, SCL. Both lines are open-drain structure and two external pull-high resistors are required. When the bus is free, both lines are high. The output stages of devices connected to the bus must have an open-drain or open-collector to implement the Wired-AND function. Data transfer is initiated only when the bus is not busy.

Data Validity

The data on the SDA line must be stable during the clock high period. The high or low state of the data line can only change when the clock signal on the SCL line is low.

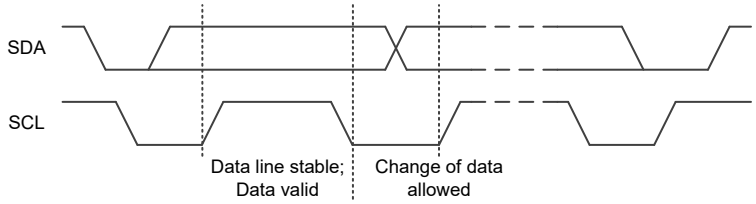

START and STOP Conditions

- A high to low transition on the SDA line while SCL is high defines a START (S).
- A low to high transition on the SDA line while SCL is high defines a STOP (P).
- START and STOP are always generated by the master. The bus is considered to be busy after the START. The bus is considered to be free again a certain time after the STOP.
- The bus remains busy if a Repeated START (Sr) is generated instead of a STOP. In the respect, the START and Repeated START are functionally identical.

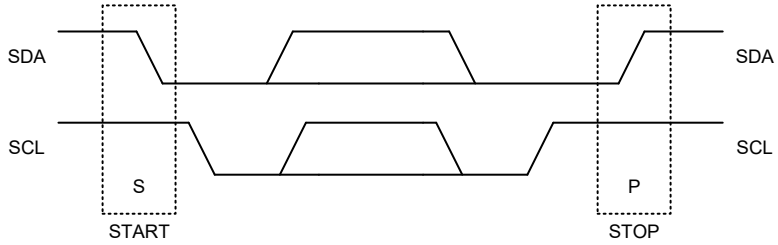

Byte Format

Every byte placed on the SDA line must be 8-bit long. The number of bytes that can be transmitted per transfer is unrestricted. Each byte has to be followed by an acknowledge bit. Data is transferred with the most significant bit (MSB) first.

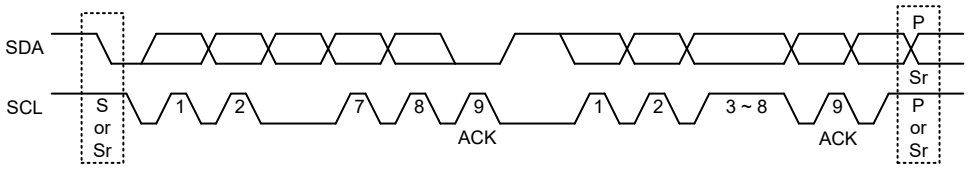

Acknowledge

- Each byte of eight bits is followed by one acknowledge bit. This acknowledge bit is a low level placed on the bus by the receiver, the master generates an extra acknowledge related clock pulse.
- A slave receiver which is addressed must generate an acknowledge (ACK) after the reception of each byte.
- The device that provides an acknowledge must pull down the SDA line during the acknowledge clock pulse so that it remains at a stable low level during the high period of this clock pulse.
- A master receiver must signal an end of data to the slave by generating a not-acknowledge (NACK) bit on the last byte that has been clocked out of the slave. In this case, the master receiver must leave the data line high during the 9th pulse so as to not acknowledge. The master will generate a STOP or a Repeated START.

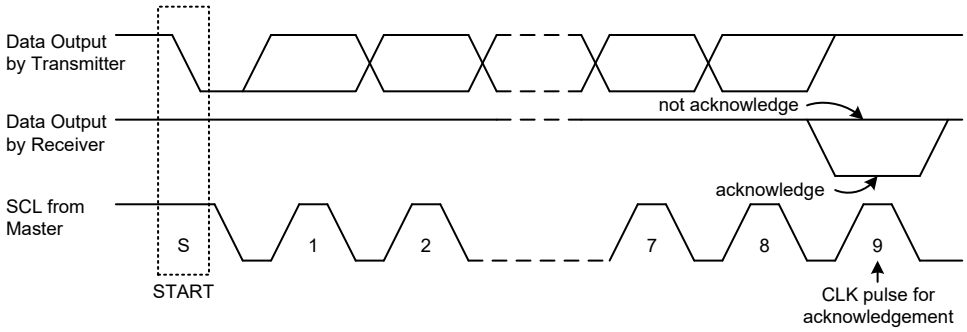

I²C Time-out Control

In order to reduce the I²C lockup problem due to reception of erroneous clock sources, a time-out function is provided. The I²C time-out function starts timing for the specified I²C time-out period (t_{OUT}) when receiving START (S) from I²C bus. The timer is reset by every falling edge of SCL and gets interrupted when receiving STOP (P). If the next falling edge of SCL or STOP (P) does not appear throughout the I²C time-out period (t_{OUT}), the SDA and SCL are set to their default states at the end of timing and meanwhile the registers remains unchanged. The I²C time-out period can be specified to 32ms.

Write Operation

An I²C write operation combines a START bit, a Slave address with a Write bit, a Register command byte, a Data byte and a STOP bit.

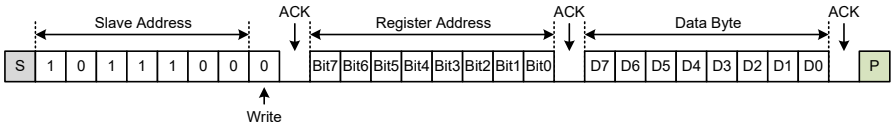

Read Sequence

The complete read mode consists of two stages. For the 1st stage, write the Register Address Byte to the device. For the 2nd stage, reads out the Data Byte from the device. The following diagram shows the complete read format.

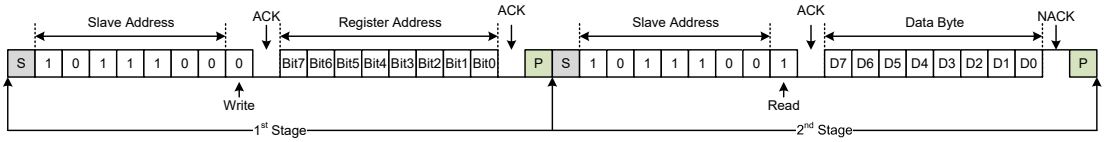

Slave Address

- The slave address byte is the first byte received following the START condition from the master device. The first seven bits of the first byte make up the slave address. The eighth bit defines whether a read or write operation is to be performed. When the R/W bit is "1", then a read operation is selected. When the R/W bit is "0", it selects a write operation.
- The slave address of the device is "1011100". When an address byte is sent, the device compares the first seven bits after the START condition. If matched, the device outputs an Acknowledge on the SDA line.

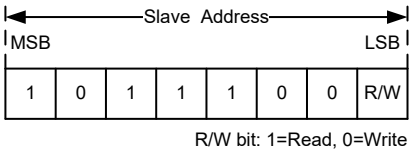

I²C Register Map

The I²C register map is listed below.

Address	Acronym	Access Type	Value after POR	Register Description
00H	REG00	R/W	0000 0000	Sleep and Voltage monitor
01H	REG01	R/W	0000 0000	Charge balance

• Sleep and Voltage Monitor Register

Bit	7	6	5	4	3	2	1	0
Name	SLP	EXT_WK	EN_S	Reserved	Reserved	B2	B1	B0
R/W	R/W	R/W	R/W	R	R	R/W	R/W	R/W
POR	0	0	0	0	0	0	0	0

Bit 7 **SLP**: Sleep mode enable control
0: Stay in normal operation
1: Start Sleep procedure
At the state of EXT_WK="1", SLP is reset to "0" and keep the "0" state until EXT_WK is cleared to "0". The Sleep command from I²C master is ignored during the state of EXT_WK="1".

Bit 6 **EXT_WK**: External wake-up event status
0: Denotes that external wake-up event does not exist
1: Denotes that external wake-up event exists or is written by MCU
(1) When the voltage applied on HVWK pin remains higher than V_{WKTH} over 10μs, the EXT_WK will be set to "1" and the SLP will be reset to "0". The EXT_WK is cleared to "0" immediately when the voltage applied on HVWK pin is less than 1.5V.
(2) The EXT_WK can be written as "1" by MCU for the purpose of sending a wake-up signal. The EXT_WK and SLP have to be written as "0" through the I²C interface after the EXT_WK is set to "1" by MCU, otherwise the external wake-up event on HVWK pin cannot be recognized and the follow-up Sleep command will be failed.
(3) Writing both EXT_WK and SLP as "1" is not permitted for avoiding unpredictable status.
(4) Reading EXT_WK reveals the external wake-up even status of the HVWK pin only.

Bit 5 **EN_S**: Voltage monitor function enable control
0: Voltage monitor function is disabled, V_{OUT}=0V
1: Voltage monitor function is enabled, $V_{OUT}=V_{BATn}/n$

Bit 4~3 Reserved bits

Bit 2~0 **B2~B0**: 7-to-1 analog multiplexer selection bits (MSB: B2, LSB: B0)
Control B2~B0 to select which accumulative cell voltage to be output to VOUT.
Note that when the EN_S is set high and the B2~B0 are set as "111", these bits will be reserved and can not be used.

EN_S	B2	B1	B0	V_{OUT} (V)
0	—	—	—	0
1	0	0	0	V_{BAT1} × 1/1
1	0	0	1	V_{BAT2} × 1/2
1	0	1	0	V_{BAT3} × 1/3
1	0	1	1	V_{BAT4} × 1/4
1	1	0	0	V_{BAT5} × 1/5
1	1	0	1	V_{BAT6} × 1/6
1	1	1	0	V_{BAT7} × 1/7

- **Charge Balance Register**

Bit	7	6	5	4	3	2	1	0
Name	D7	CB7	CB6	CB5	CB4	CB3	CB2	CB1
R/W	R/W	R/W	R/W	R/W	R/W	R/W	R/W	R/W
POR	0	0	0	0	0	0	0	0

Bit 7 **D7**: Reserved, can not be used

Bit 6 **CB7**: Enable control of the charge balance switch between VBAT7 and VBAT6
0: Balance switch OFF
1: Balance switch ON

Bit 5 **CB6**: Enable control of the charge balance switch between VBAT6 and VBAT5
0: Balance switch OFF
1: Balance switch ON

Bit 4 **CB5**: Enable control of the charge balance switch between VBAT5 and VBAT4
0: Balance switch OFF
1: Balance switch ON

Bit 3 **CB4**: Enable control of the charge balance switch between VBAT4 and VBAT3
0: Balance switch OFF
1: Balance switch ON

Bit 2 **CB3**: Enable control of the charge balance switch between VBAT3 and VBAT2
0: Balance switch OFF
1: Balance switch ON

Bit 1 **CB2**: Enable control of the charge balance switch between VBAT2 and VBAT1
0: Balance switch OFF
1: Balance switch ON

Bit 0 **CB1**: Enable control of the charge balance switch between VBAT1 and GND
0: Balance switch OFF
1: Balance switch ON

Accumulative Cell Voltage Monitor Functional Description

The accumulative cell voltage monitor consists of high voltage switches, voltage dividers and an 7-to-1 analog multiplexer as shown in the following diagram. The high voltage switches are implemented using an anti-reverse current topology which provides isolation between the output voltage and the unselected VBATn.

EN_S, B2, B1 and B0 are four control bits from I²C interface and are used to control the P-type MOSFET S1~S7 only if EN_S="1". The control truth table is shown below. This produces an accumulative cell voltage, VBATn, divided by "n" on VOUT. This accurate ±0.5% voltage divided ratio is designed to minimize any mismatch errors. Note that when the EN_S is set high and the B2~B0 are set as "111" , these bits will be reserved and can not be used.

EN_S	B2	B1	B0	S7	S6	S5	S4	S3	S2	S1	V_{OUT} (V)
0	X	X	X	1	1	1	1	1	1	1	0
1	0	0	0	1	1	1	1	1	1	0	V_{BAT1} × 1/1
1	0	0	1	1	1	1	1	1	0	1	V_{BAT2} × 1/2
1	0	1	0	1	1	1	1	0	1	1	V_{BAT3} × 1/3
1	0	1	1	1	1	1	0	1	1	1	V_{BAT4} × 1/4
1	1	0	0	1	1	0	1	1	1	1	V_{BAT5} × 1/5
1	1	0	1	1	0	1	1	1	1	1	V_{BAT6} × 1/6
1	1	1	0	0	1	1	1	1	1	1	V_{BAT7} × 1/7

Accumulative Cell Voltage Monitor Truth Table

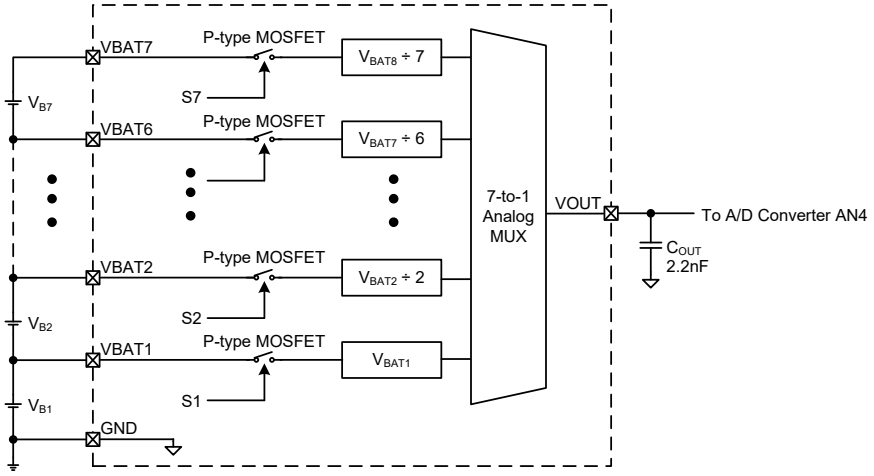

Accumulative Cell Voltage Monitor Functional Block

Charge Balance Functional Description

Multiple channels of charge balance switch can be turned on by host MCU via I²C interface. The register address of charge balance function is 01H, and the Bit 6 ~ Bit 0 of Data byte correspond to the charge balance switch of each channel from CB7 to CB1, respectively. More than one switch can be turned on at the same time, **but side-by-side cell balancing switches are recommended not to be turned on simultaneously to ensure equal balance current between each channel**. After receiving a turn on command, the charge balance switch remains turned on until it is turned off by a "0" data or getting a command of SLP bit="1". The typical charge balance current is 10mA when the battery cell voltage is 4.2V and the external series resistance is 100Ω, and the balance current can be adjusted by series resistors R1~R7. **Note that for the reason of keeping voltage monitor accuracy, do not proceed voltage monitor while charge balance is activated**.

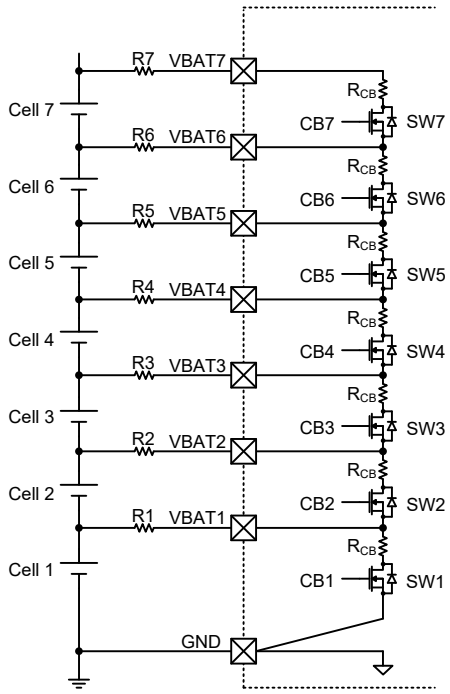

CB1	CB2	CB3	CB4	CB5	CB6	CB7	Balance Switch ON/OFF
1	0	0	0	0	0	0	SW1 ON, others OFF
0	1	0	0	0	0	0	SW2 ON, others OFF
0	0	1	0	0	0	0	SW3 ON, others OFF
0	0	0	1	0	0	0	SW4 ON, others OFF
0	0	0	0	1	0	0	SW5 ON, others OFF
0	0	0	0	0	1	0	SW6 ON, others OFF
0	0	0	0	0	0	1	SW7 ON, others OFF

Note: More than one switch can be turned on in the same time.

Discharge N-type MOSFET Gate Driver Functional Description

The discharge NMOS gate driver DGN0 is fabricated in the device as discharge switch controller. The output voltage of DGN0 is clamped at 12V. A 430kΩ pull-down resistor is integrated in the discharge gate control input pin DN0. While operating in the Standby or Sleep mode, the DGN0 is pulled down by 5Ω. The control logic and output status of DGN0 in each state is listed in the following table.

SLP	DN0	V(DGN0, GND)	Note
0	Floating	0	Pulled low to GND by 5Ω.
0	0	0	
0	1	V_Z	Normal operation.
1	Floating	0	Pulled low to GND by 5Ω.
1	0	0	

Charge N-type MOSFET Gate Driver Functional Description

A charge NMOS gate driver DGCN is provided as a charge switch controller. A charge pump circuit is fabricated to provide 12V between the gate and source node of external charge NMOS. A 430kΩ pull-down resistor is integrated in the control input pin DCN. The control logic of DCN and output status of DGCN and DSCN in each state are listed in the following table.

SLP	DCN	V(DGCN, DSCN)	Note
0	Floating	0	DGCN and DSCN pulled low to GND by 50Ω respectively. DGCN pulled low to DSCN by 90Ω.
0	0	0	
0	1	V_Z	Normal operation.
1	Floating	0	DGCN and DSCN pulled low to GND by 830Ω respectively. DGCN pulled low to DSCN by 1.65kΩ.
1	0	0	

Sleep Mode Functional Description

It is important not to confuse this Sleep mode with the SLEEP mode, which is described in the "Operating Modes and System Clocks" section of this datasheet.

EXT_WK represents the external wake-up event status. EXT_WK="0" means that high voltage applied on the HVWK pin is not detected, on the contrary EXT_WK="1" denotes that wake-up event is happening such as charger connecting or power switch on. When receiving a sleep command from I^2C master at EXT_WK="0", the SLP bit is set to "1" and the device enters the Sleep mode. During the Sleep mode, all outputs are shut down and the capacitor of VREG is discharged through internal discharge resistor. The pre-regulator and high voltage wake-up circuit are the only blocks that are still working in the Sleep mode and operate with an ultra-low standby current of 0.1μA (typical).

When EXT_WK="1", the SLP will be cleared to "0" and the sleep command from I^2C master will be abandoned until EXT_WK is cleared to "0".

EXT_WK Status	SLP Status
0	According to I^2C master command or POR default.
1	0

Wake up from Sleep Mode Functional Description

The HVWK pin can be used for detecting charger plugged-in, switch turned on, or load connected events. When the device is under the Sleep mode, if the HVWK pin is triggered by a pulse with requiring at least 5.5V voltage and 1ms width, the output of VREG will resume and the whole device is ready for normal operation. The reference timing diagram of entering the Sleep mode and waked up is listed below.

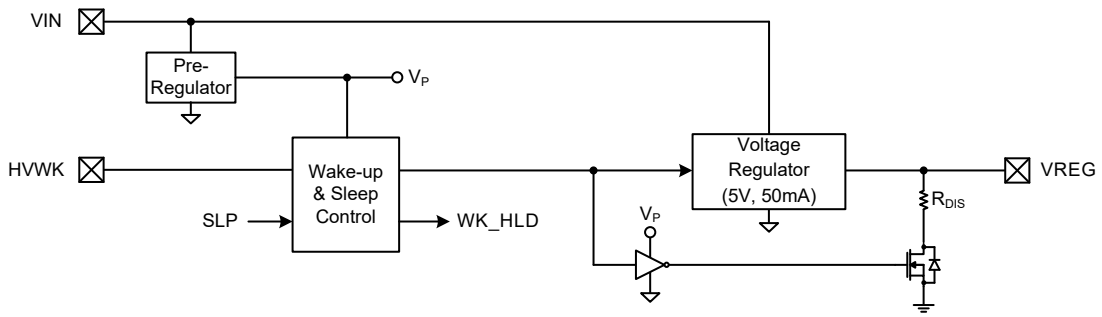
VIN
Pre-
Regulator
VP
HVWK
Wake-up
& Sleep
Control
SLP
WK_HLD
Voltage
Regulator
(5V, 50mA)
VP
RDIS
VREG

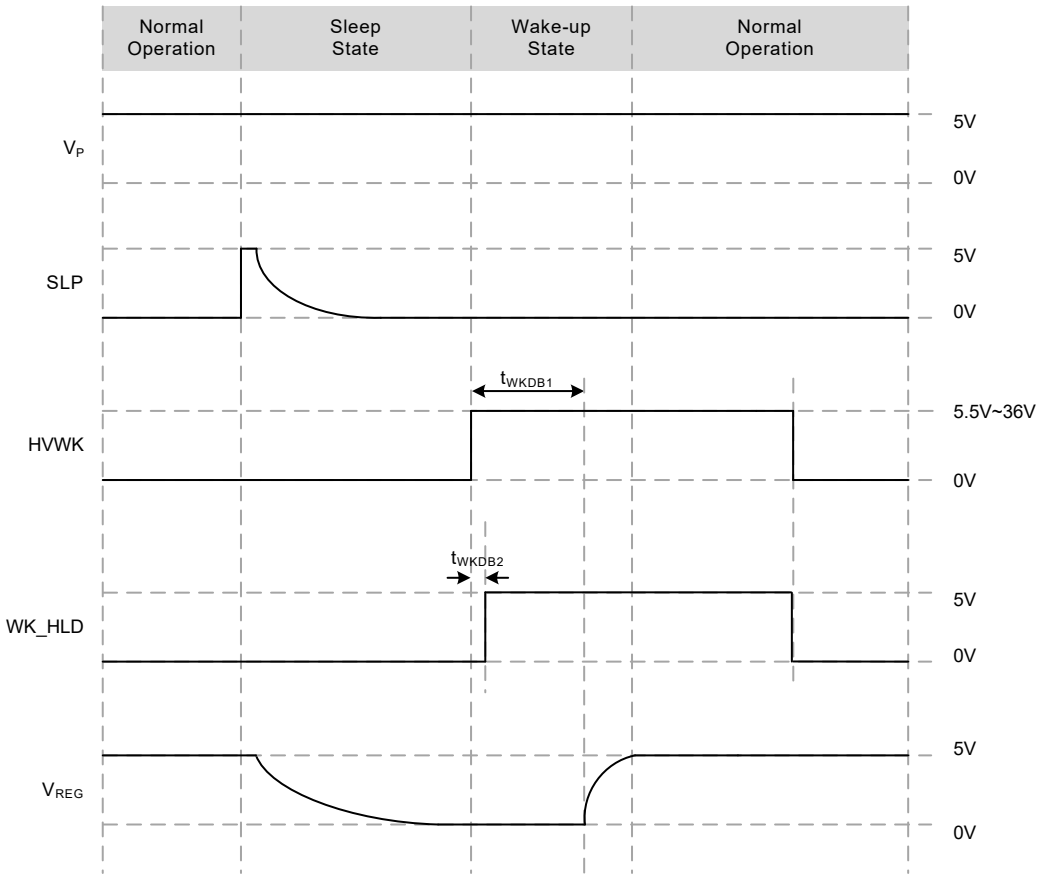
Normal
Operation
Sleep
State
Wake-up
State
Normal
Operation
VP
5V
0V
SLP
5V
0V
tWKDB1
HVWK
5.5V~36V
0V
tWKDB2
WK_HLD
5V
0V
VREG
5V
0V

Charge NMOS Switch Configuration

Due to the internal pull down MOS switch between DSCN and GND, the recommended Charge NMOS switch configuration is back-to-back or single NMOS in series with a diode in order to avoid the DSCN pin draining current from battery.

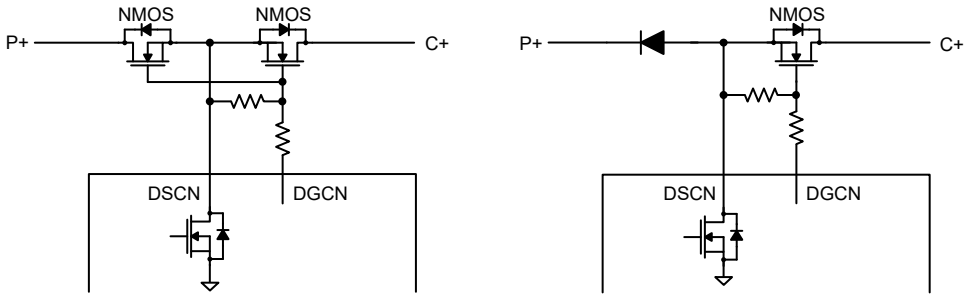

VIN, VREG, VOUT Capacitors

The VIN input capacitor C_{IN} and VREG output capacitor C_{REG} are 4.7μF for better input noise filtering and output load transient behavior. A recommended 2.2nF noise filtering capacitor should be connected between VOUT and GND terminals. Note that higher noise capacitance value of C_{OUT} will lower the acceptable scan frequency.

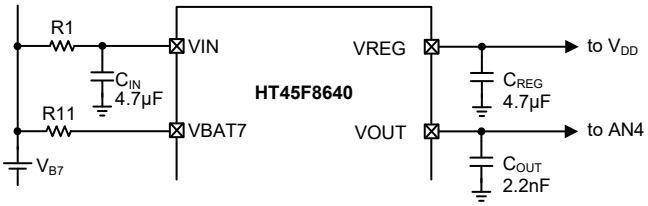

VIN Filter Recommendation

The input capacitor C_{IN} for VIN is used for lowering the input voltage ripple while the battery is supplying a highly inductive load in PWM mode. The recommanded value of VIN input capacitor C_{IN} is 4.7μF. The input resistor R1 of VIN is able to reduce the inrush current during battery assembly, and also it shares the heat on chip while VREG outputs a large current in normal operation mode. The recommanded value for VIN input resistor R1 differs from different battery cell number applications. The recommended resistance values of VIN input resistor R9 with different battery cell numbers and the corresponding VREG maximum output current are listed in the following table.

Battery Cell Number	VIN Recommended Resistor (R1)	VREG Maximum Output Current
3S	15Ω	50mA
4S	43Ω	50mA
5S	110Ω	40mA
6S	220Ω	35mA
7S	330Ω	30mA

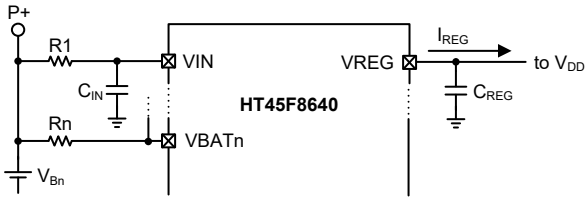

It is necessary to select an appropriate package for VIN filter resistor (R1) in order to prevent it being damaged from overheated. The maximum power on R1 is easily calculated by:

$$P_{R1.MAX} = (I_{REG})^2 \times R1$$

where I_{REG} is the maximum VREG output current, R1 is the resistance value of VIN filter resistor (R1)

It is recommended to choose the resistor package that its maximum rated power is greater than twice the $P_{R1.MAX}$.

VBATn Protection and Balance Resistor Selection

The VBATn series resistors R1~R7 not only suppress inrush and noise spikes applied to I/O pins, they affect charge balance current as well. Larger resistance of R1~R7 provide better protection to VBATn and other I/O pins, but they lower the charge balance current instead. The charge balance current of each channel is configured by internal balance resistance and external series resistors. Because the balance current of Cell 1 flows out through the GND pin, the balance current of Cell 1 is greater than that of other cells. Considering inrush spike protection to I/O pins and noise reduction of voltage monitor, the recommended typical values of resistor R1~R7 are 100Ω, and the charge balancing current is 11mA while the voltage of battery cell is 4.2V. If larger balancing current is needed, the recommended minimum values of the R1~R7 resistors are 30Ω which provide 25mA while the voltage of battery cell is 4.2V. To ensure the internal balance circuit works properly, the minimum battery cell voltage to start the balance function is 3V. The recommended VBATn series resistances and their related charge balancing current are listed in the following table.

Resistance of R1~R7	Typical Balancing Current (@ V_{Bn}=4.2V)	Note
30Ω	25mA	Minimum value of resistors R1~R7
51Ω	18mA	—
100Ω	11mA	—
150Ω	8.4mA	—

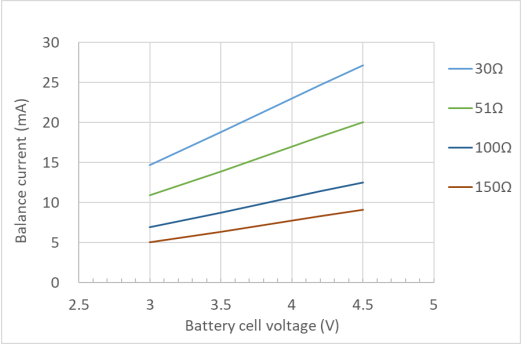

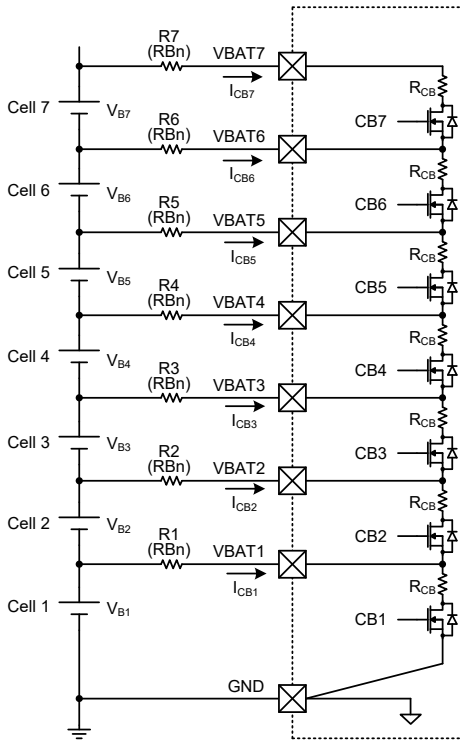

Increase Charge Balancing Current

With reference to the following application circuit, when the balanced MOS is turned on internally by MCU, R1 will generate a voltage drop to enable the BJT to be switched on. If the balancing current (I_C) is 150mA, it is recommended to select NPN transistors with HFE≥85, $V_{CE(sat)}$≤0.1V and $V_{BE(sat)}$≈0.7V. R21 and R11 can be calculated using to the following formulas:

1. Set V_{B2}=4.2V, R1=R2=100R

$$R21=(V_{B2}-V_{CE(sat)})/I_C$$

2. Select R21 resistance wattage according to the calculation result

$$P_D=(V_{B2}-V_{CE(sat)})^2/R$$

3. Calculate V_{R1} according to the “Typical Balancing Current” table

$$V_{R1}=I_{CB}\times R_{Bn}$$

4. R11 maximum value calculation formulas:

$$I_B=I_C/HFE$$

$$R11=(V_{R1}-V_{BE(sat)})/I_B$$

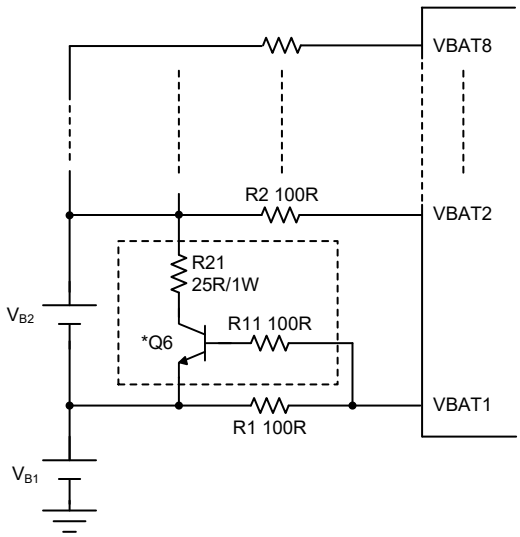

Note: If the VB1 is unbalanced, the VBAT1 can only use the internal balance function.

Charger and Switch Status Detection

The High-voltage wake-up (HVWK) function is capable of detecting charger plugged in or load switched on. Two recommended HVWK external circuits are listed below, the main distinction is between switch high-voltage wake-up and switch low-voltage wake-up, whereas the chargers are both high-voltage wake-up.

The first circuit is a typical application for charger or switch high-voltage wake-up function, switch active high detection, charger plugged-in detection and charger voltage detection.

When a charger is plugged in or load switch is on, the voltage of HVWK is triggered to be larger than V_{WKTH} and set the EXT_WK bit as “1”. After the charger is removed or the switch is turned off, the EXT_WK bit is reset to “0”. An MCU can acquire the charger or switch status by reading the EXT_WK bit through the I^2C interface. Therefore, by the means of reading the EXT_WK bit status, additional charger or switch detection circuits for MCU are not necessary.

When the MCU requires to directly detect the switch status, a clamp circuit R40, R41 and ZD1 should be added to prevent the high voltage generated by pressing SW from entering the SW_DET directly. The typical values of R40 and R41 are 100kΩ and the ZD1 is 4.7V. When the battery is at a low voltage (PACK0+=7.5V), the voltage divided ratio of R40 and R41 should be adjusted according to the situation to ensure that the SW_DET voltage is higher than the MCU high level threshold.

In addition, the MCU can use its ADC to read the CHG_DET and then calculate the charger voltage using the voltage divided ratio of R42 and R43. The typical values of R42 and R43 are 100kΩ and 5.1kΩ respectively.

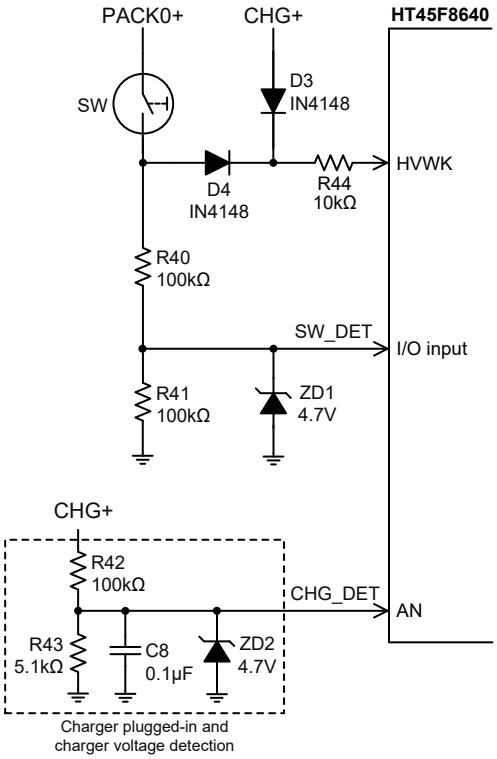

The second circuit is a typical application for charger high-voltage wake-up function, switch low-voltage wake-up function, switch active low detection, charger plugged-in detection and charger voltage detection. The charger detection parts are the same as the diagram above.

For the switch low-voltage wake-up function, the switch detection circuit needs to be changed, which can be obtained from the following application circuit. When the switch is turned on, the Q1 is switched on and the voltage of HVWK is triggered to be larger than V_{WKTH} and set the EXT_WK bit as “1”. After the switch is turned off, the Q1 is switched off and the EXT_WK bit is reset to “0”.

When the MCU requires to directly detect the switch status, a reverse diode D5 should be connected in series between the SW and SW_DET to prevent the high voltage when the switch is off from entering the MCU pin. The typical value of diode D5 is 1N4148.

In the switch off state, when the MCU has no internal pull-up resistor function, it is recommended to add R45, with a typical value of 10kΩ.

The resistance values of R41 and R40 should not be too small to avoid the current consumption after the switch is pressed. They must be matched with Q1. When Q1 is MMBT5401, the typical values of R41 and R40 are 100kΩ.

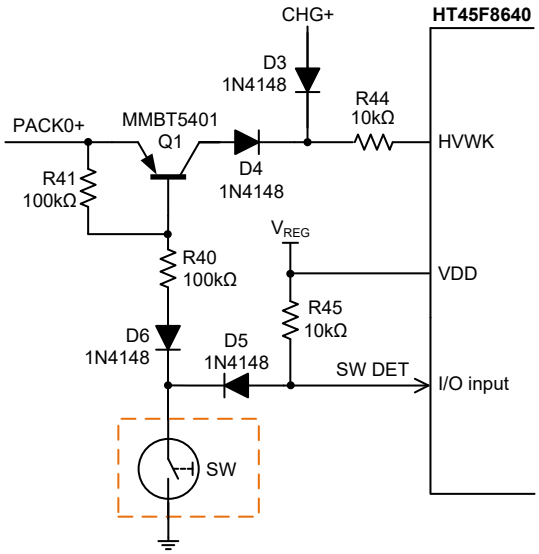

Cell Voltage Monitor Scan Frequency

The VOUT pin outputs accumulative cell voltage to the MCU ADC for monitoring battery voltage status. The timing diagrams of cell voltage monitor scanning for 5S and 7S applications are shown below. The VOUT pin starts to charge the VOUT capacitor from 0V to the selected cell voltage while the EN_S is set to "1". In order to ensure the MCU A/D conversion accuracy, the A/D conversion procedure has to wait before the VOUT capacitor is fully charged. The suggested minimum waiting time is 5ms after the EN_S is set to "1" or cell voltage monitor channel switched. It is recommended that the maximum scan frequency for accumulative cell voltage monitoring is less than 100Hz and that EN_S="0" when the voltage scanning procedure has finished for power saving purposes.

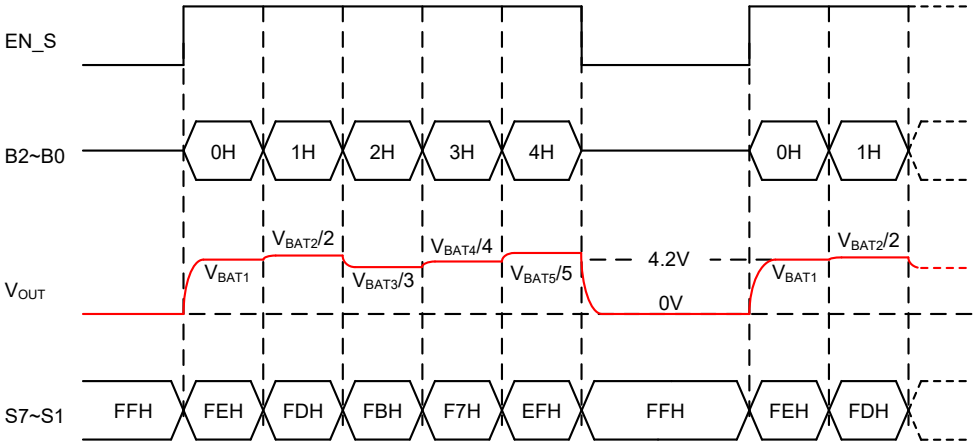

5S Battery Monitoring Timing

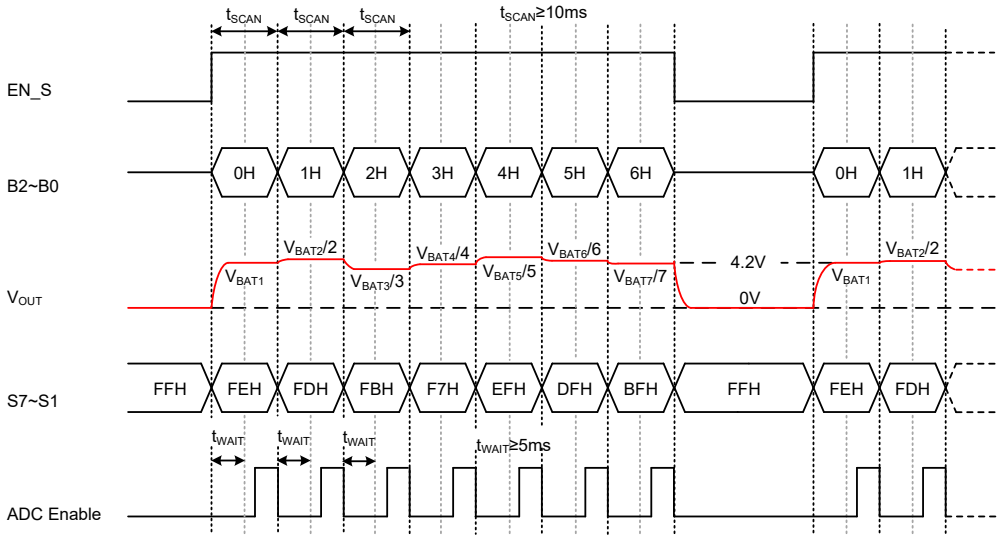

7S Battery Monitoring Timing

Voltage Spike Suppression Method

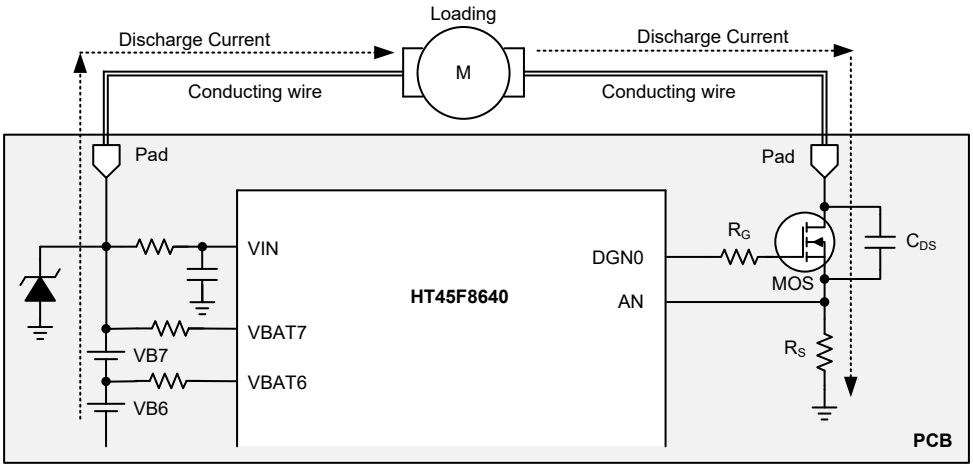

Simplified Typical BMS System Discharge Path Diagram

Most battery-management systems would monitor charge and discharge current to prevent over-current damage. Due to the parasitic inductance on conducting wires and PCB layout connections, large voltage spike may occurs while the external MOS rapidly shuts down the charge or discharge current, and this spike may damage the device VBATn or VIN pins. Any voltage spike on the VBATn and VIN pins should not over the limitation in Absolute Maximum Ratings, which is 48V. Four recommended measures listed below would help to reduce the voltage spike.

1. Make the external conducting wire and PCB layout connections as short as possible where large charge or discharge current flows.
2. Adjust the slew rate of MOS switch with the gate resistor R_G. Turn off the MOS with slower slew rate for lower voltage spike, and the tradeoff is a slower protection response time.
3. Add a capacitor (C_{DS}) between drain and source node of the MOS switch as shown above. The recommended capacitance is 0.1μF to 0.22μF.
4. Add a Zener diode between the highest voltage potential node of battery cells and GND.

System ESD/EFT Protection Circuit Description

Charge Circuit

With reference to the following application circuit, connect a pull-down resistor R11 between the device DSCN and DGCN pins, with a typical value of 1MΩ. Connect a resistor R10 to the MOSFET gate node, with a typical value of 100Ω. The typical values of C1 and C2 capacitors are 0.1μF, which can reduce the external electrostatic energy of PACK+ and CHG+. In the PCB layout, the above components should be placed close to the MOSFET pins.

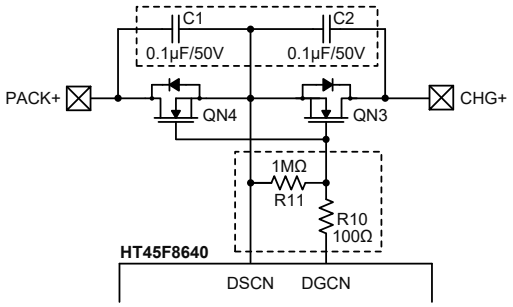

Power

The R5 and R7 resistors can reduce the external electrostatic energy of CHG+ and PACK+, which are typically 330Ω. They should be placed close to the CHG+ and PACK+ terminals in the PCB layout.

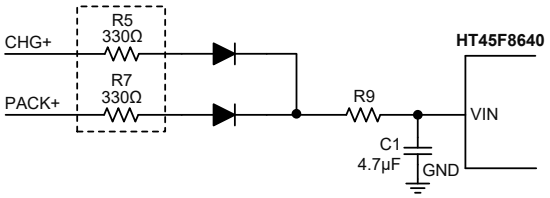

Battery Detection Circuit

Add an RBn resistor at each battery cell detection path and add a CBn capacitor to ground near the device VBAT pin, which can limit the reduced electrostatic energy. The typical value of the RBn resistor is 30Ω, and the typical value of the CBn capacitor is 0.1μF.

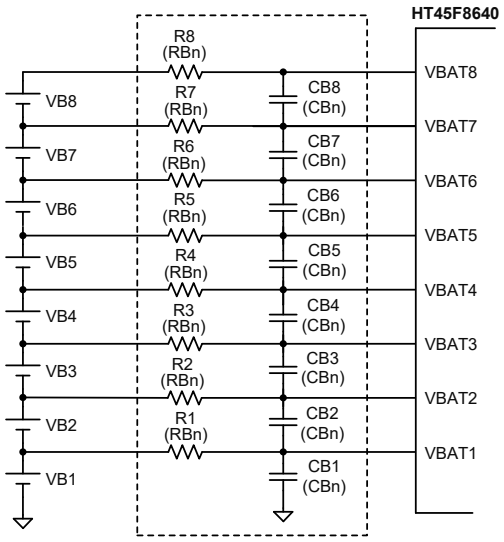

Charge Balance Register Off Method

Time to execute "Charge Balance Register Off":

1. Execute the operation once after the MCU is powered on
2. When each battery cell measurement procedure is executed, if the difference between the battery cell lowest and highest voltage is greater than 200mV, it is necessary to execute the "charge balance register off" once and then perform the measurement procedure for each battery cell again to ensure the measurement accuracy. If the voltage difference still exceeds 200mV, this indicates that the battery is unbalanced.

Considering that two adjacent charge balance registers cannot be on at the same time, it is necessary to turn off the charge balance register according to the following write logic:

1. Write 0x55 to the charge balance register (REG01)
2. Write 0xAA
3. Write 0x00

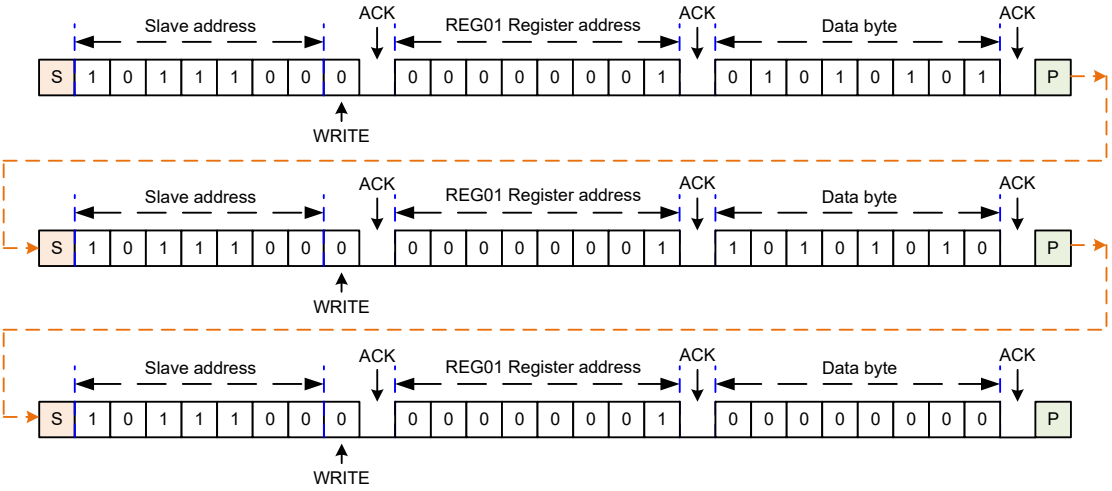

Charge Balance Turn off Sequence

Charge Balance Register On Method

Considering that two adjacent charge balance registers cannot be on at the same time, it is necessary to turn on the charge balance register according to the following write logic:

1. Write 0x55 to the charge balance register (REG01)
2. Write 0xAA
3. Write 0x00
4. Write to the battery cell that needs to be turned on

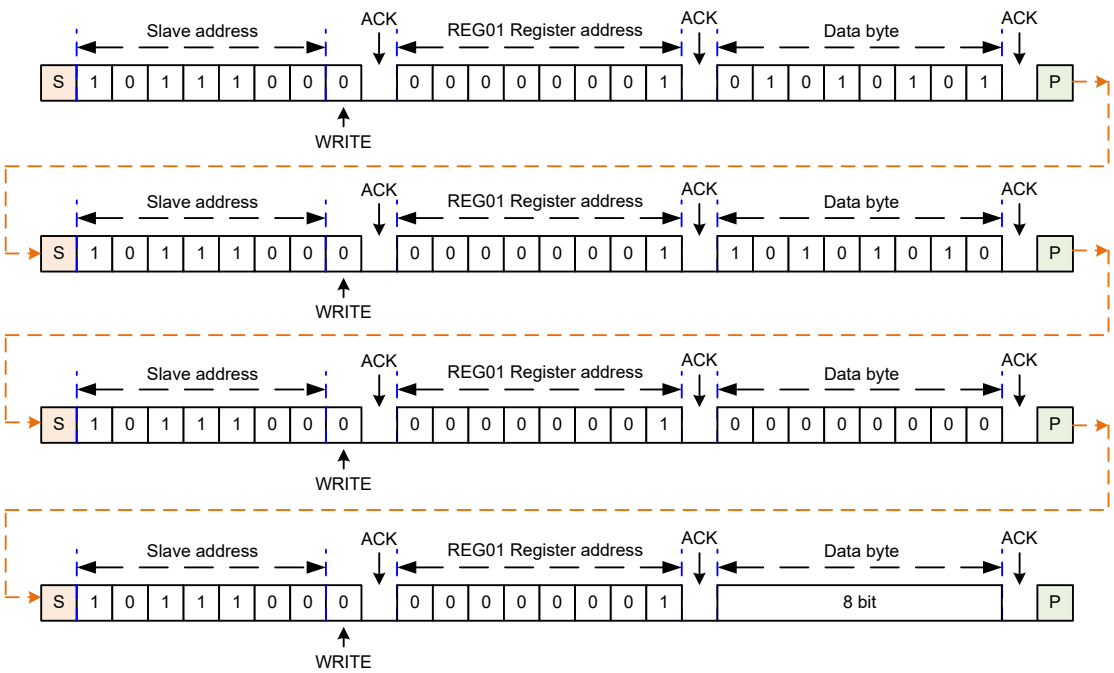

Charge Balance Turn on Sequence

PCB Layout Considerations

The following component placement and layout guidelines are suggested for the sake of noise reduction and voltage spike suppression.

1. The VIN filter capacitor must be close to VIN pin.
2. The VREG regulation and noise filter capacitor must be close to VREG pin.
3. The tracks where large current would flow through should be wide and short to suppress the voltage spike at the time when external NMOS switch change its ON/OFF state.
4. Minimize VBAT1~VBAT7 signal trace length to reduce parasitic inductance and capacitance and improve measure accuracy.

Thermal Considerations

The maximum power dissipation depends upon the thermal resistance of the product package, PCB layout, rate of surrounding airflow and difference between the junction and ambient temperature. The maximum power dissipation can be calculated by the following formula:

$$P_{D(MAX)} = (T_{J(MAX)} – Ta) / \theta_{JA} \text{ (W)}$$

where $T_{J(MAX)}$ is the maximum junction temperature, Ta is the ambient temperature and θ_{JA} is the junction-to-ambient thermal resistance of the product package.

For maximum operating rating conditions, the maximum junction temperature is 125°C. However, it is recommended that the maximum junction temperature does not exceed 125°C during normal operation to maintain high reliability. The de-rating curve of the maximum power dissipation is show below:

$$P_{D(MAX)} = (125°C-25°C) / (85°C/W) = 1.18W$$

For a fixed $T_{J(MAX)}$ of 125°C, the maximum power dissipation depends upon the operating ambient temperature and the package's thermal resistance, θ_{JA}. The de-rating curve below shows the effect of rising ambient temperature on the maximum recommended power dissipation.

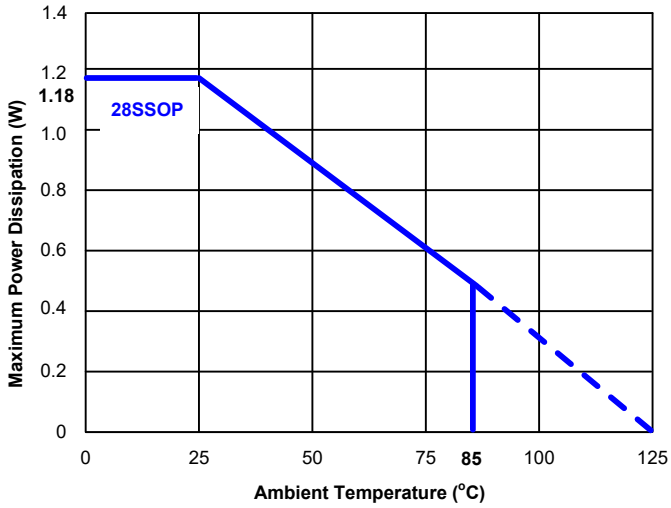

Configuration Options

Configuration options refer to certain options within the MCU that are programmed into the device during the programming process. During the development process, these options are selected using the HT-IDE software development tools. The option must be defined for proper system function, the details of which are shown in the table.

No.	Options
Oscillator Option	
1	HIRC frequency selection – f_{HIRC}: 8MHz, 12MHz or 16MHz

Note: When the HIRC has been configured at a frequency shown in this table, the HIRC1 and HIRC0 bits should also be set to select the same frequency to achieve the HIRC frequency accuracy specified in the A.C. Characteristics.

Application Circuits

3S Battery Monitoring Typical Application Circuit

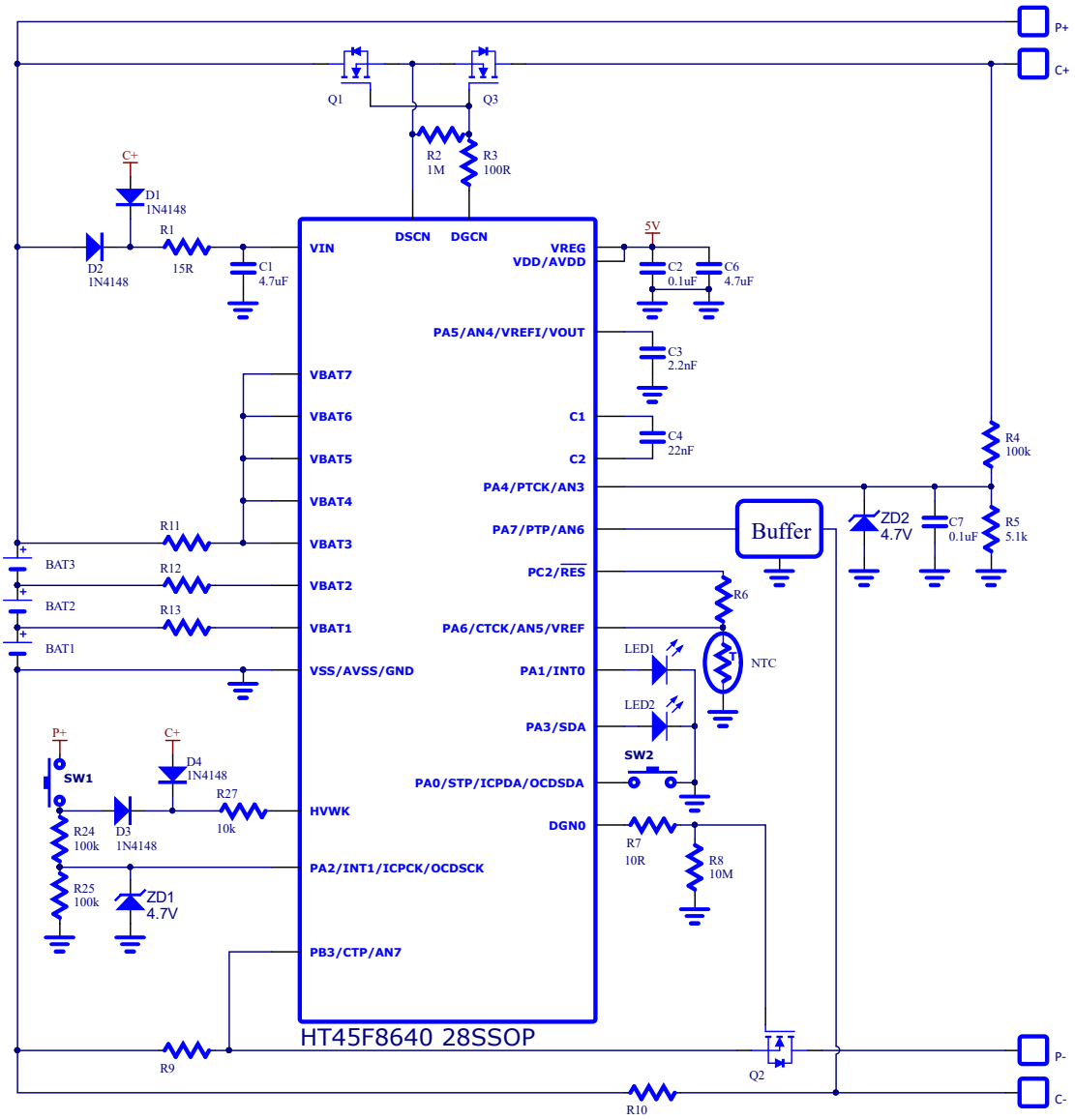

Note: 1. The resistance of R11~R13 can be adjusted to fit the desired balance current. The recommended resistance of R11~R13 are listed in the "VBATn Protection and Balancing Resistor Selection" section. If it is necessary to use the switch low-voltage wake-up function, that is, SW1 is connected to GND, refer to SW1, Q1 and related circuits in this example.

2. If less than 7 serial batteries are used, connect the unused VBATn to the highest voltage potential. Do not leave any VBATn pin floating to prevent damage to the device.

3. The VREG pin should be connected to the VDD pin.

4. VIN pin should not be floating to prevent abnormal operations.

7S Battery Monitoring Typical Application Circuit

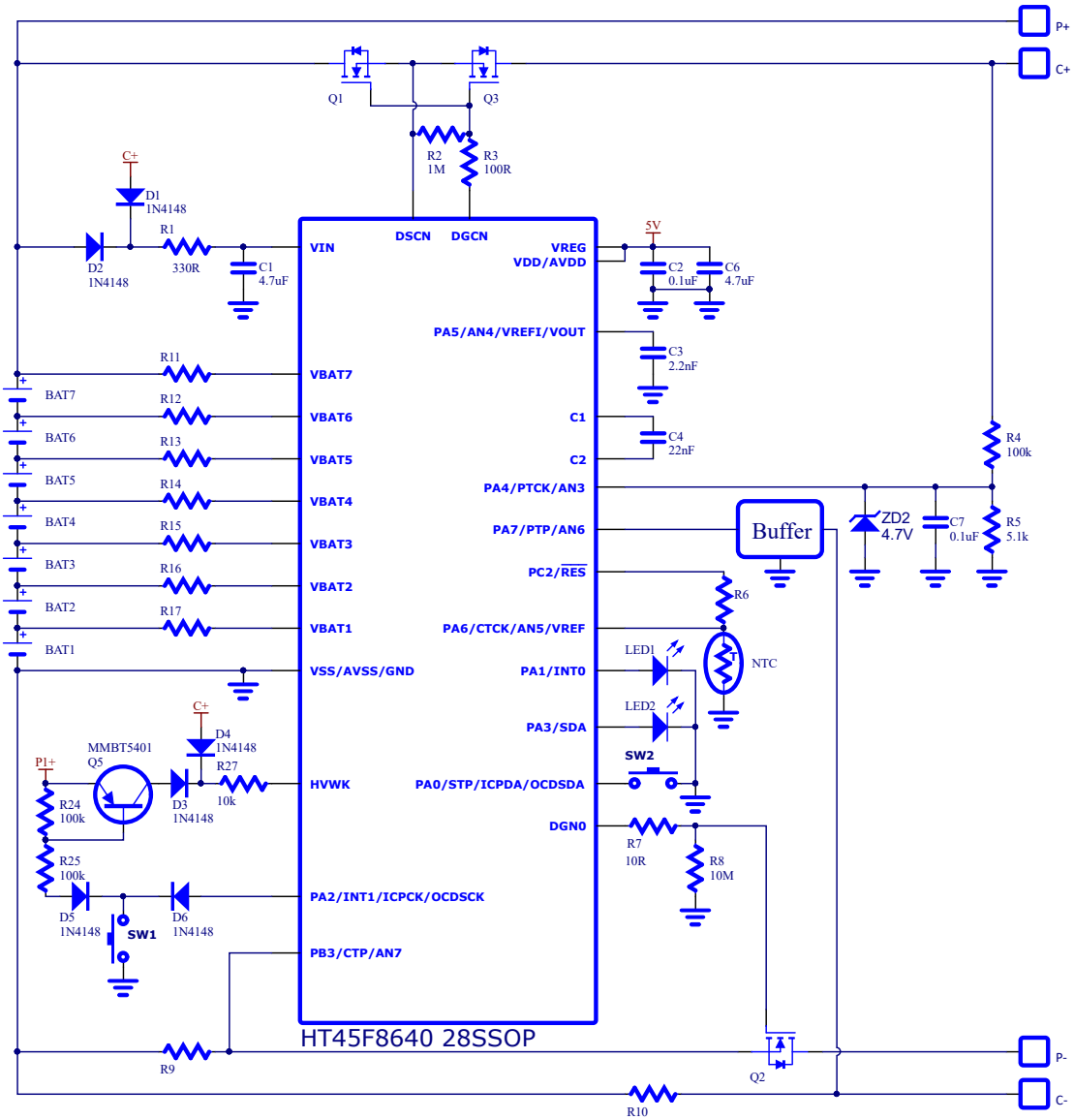

Note: 1. The resistance of R11~R17 can be adjusted to fit the desired balance current. The recommended resistance of R11~R17 are listed in the "VBATn Protection and Balancing Resistor Selection" section. If it is necessary to use the switch low-voltage wake-up function, that is, SW1 is connected to GND, refer to SW1, Q5 and related circuits in this example.

2. If less than 7 serial batteries are used, connect the unused VBATn to the highest voltage potential. Do not leave any VBATn pin floating to prevent damage to the device.

3. The VREG pin should be connected to the VDD pin.

4. VIN pin should not be floating to prevent abnormal operations.

Instruction Set

Introduction

Central to the successful operation of any microcontroller is its instruction set, which is a set of program instruction codes that directs the microcontroller to perform certain operations. In the case of Holtek microcontroller, a comprehensive and flexible set of over 60 instructions is provided to enable programmers to implement their application with the minimum of programming overheads.

For easier understanding of the various instruction codes, they have been subdivided into several functional groupings.

Instruction Timing

Most instructions are implemented within one instruction cycle. The exceptions to this are branch, call, or table read instructions where two instruction cycles are required. One instruction cycle is equal to 4 system clock cycles, therefore in the case of an 8MHz system oscillator, most instructions would be implemented within 0.5μs and branch or call instructions would be implemented within 1μs. Although instructions which require one more cycle to implement are generally limited to the JMP, CALL, RET, RETI and table read instructions, it is important to realize that any other instructions which involve manipulation of the Program Counter Low register or PCL will also take one more cycle to implement. As instructions which change the contents of the PCL will imply a direct jump to that new address, one more cycle will be required. Examples of such instructions would be “CLR PCL” or “MOV PCL, A”. For the case of skip instructions, it must be noted that if the result of the comparison involves a skip operation then this will also take one more cycle, if no skip is involved then only one cycle is required.

Moving and Transferring Data

The transfer of data within the microcontroller program is one of the most frequently used operations. Making use of several kinds of MOV instructions, data can be transferred from registers to the Accumulator and vice-versa as well as being able to move specific immediate data directly into the Accumulator. One of the most important data transfer applications is to receive data from the input ports and transfer data to the output ports.

Arithmetic Operations

The ability to perform certain arithmetic operations and data manipulation is a necessary feature of most microcontroller applications. Within the Holtek microcontroller instruction set are a range of add and subtract instruction mnemonics to enable the necessary arithmetic to be carried out. Care must be taken to ensure correct handling of carry and borrow data when results exceed 255 for addition and less than 0 for subtraction. The increment and decrement instructions such as INC, INCA, DEC and DECA provide a simple means of increasing or decreasing by a value of one of the values in the destination specified.

Logical and Rotate Operation

The standard logical operations such as AND, OR, XOR and CPL all have their own instruction within the Holtek microcontroller instruction set. As with the case of most instructions involving data manipulation, data must pass through the Accumulator which may involve additional programming steps. In all logical data operations, the zero flag may be set if the result of the operation is zero. Another form of logical data manipulation comes from the rotate instructions such as RR, RL, RRC and RLC which provide a simple means of rotating one bit right or left. Different rotate instructions exist depending on program requirements. Rotate instructions are useful for serial port programming applications where data can be rotated from an internal register into the Carry bit from where it can be examined and the necessary serial bit set high or low. Another application which rotate data operations are used is to implement multiplication and division calculations.

Branches and Control Transfer

Program branching takes the form of either jumps to specified locations using the JMP instruction or to a subroutine using the CALL instruction. They differ in the sense that in the case of a subroutine call, the program must return to the instruction immediately when the subroutine has been carried out. This is done by placing a return instruction "RET" in the subroutine which will cause the program to jump back to the address right after the CALL instruction. In the case of a JMP instruction, the program simply jumps to the desired location. There is no requirement to jump back to the original jumping off point as in the case of the CALL instruction. One special and extremely useful set of branch instructions are the conditional branches. Here a decision is first made regarding the condition of a certain data memory or individual bits. Depending upon the conditions, the program will continue with the next instruction or skip over it and jump to the following instruction. These instructions are the key to decision making and branching within the program perhaps determined by the condition of certain input switches or by the condition of internal data bits.

Bit Operations

The ability to provide single bit operations on Data Memory is an extremely flexible feature of all Holtek microcontrollers. This feature is especially useful for output port bit programming where individual bits or port pins can be directly set high or low using either the "SET [m].i" or "CLR [m].i" instructions respectively. The feature removes the need for programmers to first read the 8-bit output port, manipulate the input data to ensure that other bits are not changed and then output the port with the correct new data. This read-modify-write process is taken care of automatically when these bit operation instructions are used.

Table Read Operations

Data storage is normally implemented by using registers. However, when working with large amounts of fixed data, the volume involved often makes it inconvenient to store the fixed data in the Data Memory. To overcome this problem, Holtek microcontrollers allow an area of Program Memory to be setup as a table where data can be directly stored. A set of easy to use instructions provides the means by which this fixed data can be referenced and retrieved from the Program Memory.

Other Operations

In addition to the above functional instructions, a range of other instructions also exist such as the "HALT" instruction for Power-down operations and instructions to control the operation of the Watchdog Timer for reliable program operations under extreme electric or electromagnetic environments. For their relevant operations, refer to the functional related sections.

Instruction Set Summary

The instructions related to the data memory access in the following table can be used when the desired data memory is located in Data Memory sector 0.

Table Conventions

x: Bits immediate data
m: Data Memory address
A: Accumulator
i: 0~7 number of bits
addr: Program memory address

Mnemonic	Description	Cycles	Flag Affected
Arithmetic			
ADD A,[m]	Add Data Memory to ACC	1	Z, C, AC, OV, SC
ADDM A,[m]	Add ACC to Data Memory	1[Note]	Z, C, AC, OV, SC
ADD A,x	Add immediate data to ACC	1	Z, C, AC, OV, SC
ADC A,[m]	Add Data Memory to ACC with Carry	1	Z, C, AC, OV, SC
ADCM A,[m]	Add ACC to Data memory with Carry	1[Note]	Z, C, AC, OV, SC
SUB A,x	Subtract immediate data from the ACC	1	Z, C, AC, OV, SC, CZ
SUB A,[m]	Subtract Data Memory from ACC	1	Z, C, AC, OV, SC, CZ
SUBM A,[m]	Subtract Data Memory from ACC with result in Data Memory	1[Note]	Z, C, AC, OV, SC, CZ
SBC A,x	Subtract immediate data from ACC with Carry	1	Z, C, AC, OV, SC, CZ
SBC A,[m]	Subtract Data Memory from ACC with Carry	1	Z, C, AC, OV, SC, CZ
SBCM A,[m]	Subtract Data Memory from ACC with Carry, result in Data Memory	1[Note]	Z, C, AC, OV, SC, CZ
DAA [m]	Decimal adjust ACC for Addition with result in Data Memory	1[Note]	C
Logic Operation			
AND A,[m]	Logical AND Data Memory to ACC	1	Z
OR A,[m]	Logical OR Data Memory to ACC	1	Z
XOR A,[m]	Logical XOR Data Memory to ACC	1	Z
ANDM A,[m]	Logical AND ACC to Data Memory	1[Note]	Z
ORM A,[m]	Logical OR ACC to Data Memory	1[Note]	Z
XORM A,[m]	Logical XOR ACC to Data Memory	1[Note]	Z
AND A,x	Logical AND immediate Data to ACC	1	Z
OR A,x	Logical OR immediate Data to ACC	1	Z
XOR A,x	Logical XOR immediate Data to ACC	1	Z
CPL [m]	Complement Data Memory	1[Note]	Z
CPLA [m]	Complement Data Memory with result in ACC	1	Z
Increment & Decrement			
INCA [m]	Increment Data Memory with result in ACC	1	Z
INC [m]	Increment Data Memory	1[Note]	Z
DECA [m]	Decrement Data Memory with result in ACC	1	Z
DEC [m]	Decrement Data Memory	1[Note]	Z
Rotate			
RRA [m]	Rotate Data Memory right with result in ACC	1	None
RR [m]	Rotate Data Memory right	1[Note]	None
RRCA [m]	Rotate Data Memory right through Carry with result in ACC	1	C
RRC [m]	Rotate Data Memory right through Carry	1[Note]	C
RLA [m]	Rotate Data Memory left with result in ACC	1	None
RL [m]	Rotate Data Memory left	1[Note]	None
RLCA [m]	Rotate Data Memory left through Carry with result in ACC	1	C
RLC [m]	Rotate Data Memory left through Carry	1[Note]	C

Mnemonic	Description	Cycles	Flag Affected
Data Move			
MOV A,[m]	Move Data Memory to ACC	1	None
MOV [m],A	Move ACC to Data Memory	1[Note]	None
MOV A,x	Move immediate data to ACC	1	None
Bit Operation			
CLR [m].i	Clear bit of Data Memory	1[Note]	None
SET [m].i	Set bit of Data Memory	1[Note]	None
Branch Operation			
JMP addr	Jump unconditionally	2	None
SZ [m]	Skip if Data Memory is zero	1[Note]	None
SZA [m]	Skip if Data Memory is zero with data movement to ACC	1[Note]	None
SZ [m].i	Skip if bit i of Data Memory is zero	1[Note]	None
SNZ [m]	Skip if Data Memory is not zero	1[Note]	None
SNZ [m].i	Skip if bit i of Data Memory is not zero	1[Note]	None
SIZ [m]	Skip if increment Data Memory is zero	1[Note]	None
SDZ [m]	Skip if decrement Data Memory is zero	1[Note]	None
SIZA [m]	Skip if increment Data Memory is zero with result in ACC	1[Note]	None
SDZA [m]	Skip if decrement Data Memory is zero with result in ACC	1[Note]	None
CALL addr	Subroutine call	2	None
RET	Return from subroutine	2	None
RET A,x	Return from subroutine and load immediate data to ACC	2	None
RETI	Return from interrupt	2	None
Table Read Operation			
TABRD [m]	Read table (specific page) to TBLH and Data Memory	2[Note]	None
TABRDL [m]	Read table (last page) to TBLH and Data Memory	2[Note]	None
ITABRD [m]	Increment table pointer TBLP first and Read table (specific page) to TBLH and Data Memory	2[Note]	None
ITABRDL [m]	Increment table pointer TBLP first and Read table (last page) to TBLH and Data Memory	2[Note]	None
Miscellaneous			
NOP	No operation	1	None
CLR [m]	Clear Data Memory	1[Note]	None
SET [m]	Set Data Memory	1[Note]	None
CLR WDT	Clear Watchdog Timer	1	TO, PDF
SWAP [m]	Swap nibbles of Data Memory	1[Note]	None
SWAPA [m]	Swap nibbles of Data Memory with result in ACC	1	None
HALT	Enter power down mode	1	TO, PDF

Note: 1. For skip instructions, if the result of the comparison involves a skip then two cycles are required, if no skip takes place only one cycle is required.

2. Any instruction which changes the contents of the PCL will also require 2 cycles for execution.

Extended Instruction Set

The extended instructions are used to support the full range address access for the data memory. When the accessed data memory is located in any data memory sector except sector 0, the extended instruction can be used to directly access the data memory instead of using the indirect addressing access. This can not only reduce the use of Flash memory space but also improve the CPU execution efficiency.

Mnemonic	Description	Cycles	Flag Affected
Arithmetic			
LADD A,[m]	Add Data Memory to ACC	2	Z, C, AC, OV, SC
LADDM A,[m]	Add ACC to Data Memory	2[Note]	Z, C, AC, OV, SC
LADC A,[m]	Add Data Memory to ACC with Carry	2	Z, C, AC, OV, SC
LADCM A,[m]	Add ACC to Data memory with Carry	2[Note]	Z, C, AC, OV, SC
LSUB A,[m]	Subtract Data Memory from ACC	2	Z, C, AC, OV, SC, CZ
LSUBM A,[m]	Subtract Data Memory from ACC with result in Data Memory	2[Note]	Z, C, AC, OV, SC, CZ
LSBC A,[m]	Subtract Data Memory from ACC with Carry	2	Z, C, AC, OV, SC, CZ
LSBCM A,[m]	Subtract Data Memory from ACC with Carry, result in Data Memory	2[Note]	Z, C, AC, OV, SC, CZ
LDAA [m]	Decimal adjust ACC for Addition with result in Data Memory	2[Note]	C
Logic Operation			
LAND A,[m]	Logical AND Data Memory to ACC	2	Z
LOR A,[m]	Logical OR Data Memory to ACC	2	Z
LXOR A,[m]	Logical XOR Data Memory to ACC	2	Z
LANDM A,[m]	Logical AND ACC to Data Memory	2[Note]	Z
LORM A,[m]	Logical OR ACC to Data Memory	2[Note]	Z
LXORM A,[m]	Logical XOR ACC to Data Memory	2[Note]	Z
LCPL [m]	Complement Data Memory	2[Note]	Z
LCPLA [m]	Complement Data Memory with result in ACC	2	Z
Increment & Decrement			
LINCA [m]	Increment Data Memory with result in ACC	2	Z
LINC [m]	Increment Data Memory	2[Note]	Z
LDECA [m]	Decrement Data Memory with result in ACC	2	Z
LDEC [m]	Decrement Data Memory	2[Note]	Z
Rotate			
LRRA [m]	Rotate Data Memory right with result in ACC	2	None
LRR [m]	Rotate Data Memory right	2[Note]	None
LRRCA [m]	Rotate Data Memory right through Carry with result in ACC	2	C
LRRC [m]	Rotate Data Memory right through Carry	2[Note]	C
LRLA [m]	Rotate Data Memory left with result in ACC	2	None
LRL [m]	Rotate Data Memory left	2[Note]	None
LRLCA [m]	Rotate Data Memory left through Carry with result in ACC	2	C
LRLC [m]	Rotate Data Memory left through Carry	2[Note]	C
Data Move			
LMOV A,[m]	Move Data Memory to ACC	2	None
LMOV [m],A	Move ACC to Data Memory	2[Note]	None
Bit Operation			
LCLR [m].i	Clear bit of Data Memory	2[Note]	None
LSET [m].i	Set bit of Data Memory	2[Note]	None

Mnemonic	Description	Cycles	Flag Affected
Branch			
LSZ [m]	Skip if Data Memory is zero	2[Note]	None
LSZA [m]	Skip if Data Memory is zero with data movement to ACC	2[Note]	None
LSNZ [m]	Skip if Data Memory is not zero	2[Note]	None
LSZ [m].i	Skip if bit i of Data Memory is zero	2[Note]	None
LSNZ [m].i	Skip if bit i of Data Memory is not zero	2[Note]	None
LSIZ [m]	Skip if increment Data Memory is zero	2[Note]	None
LSDZ [m]	Skip if decrement Data Memory is zero	2[Note]	None
LSIZA [m]	Skip if increment Data Memory is zero with result in ACC	2[Note]	None
LSDZA [m]	Skip if decrement Data Memory is zero with result in ACC	2[Note]	None
Table Read			
LTABRD [m]	Read table (specific page) to TBLH and Data Memory	3[Note]	None
LTABRDL [m]	Read table (last page) to TBLH and Data Memory	3[Note]	None
LITABRD [m]	Increment table pointer TBLP first and Read table (specific page) to TBLH and Data Memory	3[Note]	None
LITABRDL [m]	Increment table pointer TBLP first and Read table (last page) to TBLH and Data Memory	3[Note]	None
Miscellaneous			
LCLR [m]	Clear Data Memory	2[Note]	None
LSET [m]	Set Data Memory	2[Note]	None
LSWAP [m]	Swap nibbles of Data Memory	2[Note]	None
LSWAPA [m]	Swap nibbles of Data Memory with result in ACC	2	None

Note: 1. For these extended skip instructions, if the result of the comparison involves a skip then three cycles are required, if no skip takes place two cycles is required.

2. Any extended instruction which changes the contents of the PCL register will also require three cycles for execution.

Instruction Definition

ADC A,[m]	Add Data Memory to ACC with Carry
Description	The contents of the specified Data Memory, Accumulator and the carry flag are added. The result is stored in the Accumulator.
Operation	ACC ← ACC + [m] + C
Affected flag(s)	OV, Z, AC, C, SC
ADCM A,[m]	Add ACC to Data Memory with Carry
Description	The contents of the specified Data Memory, Accumulator and the carry flag are added. The result is stored in the specified Data Memory.
Operation	[m] ← ACC + [m] + C
Affected flag(s)	OV, Z, AC, C, SC
ADD A,[m]	Add Data Memory to ACC
Description	The contents of the specified Data Memory and the Accumulator are added. The result is stored in the Accumulator.
Operation	ACC ← ACC + [m]
Affected flag(s)	OV, Z, AC, C, SC
ADD A,x	Add immediate data to ACC
Description	The contents of the Accumulator and the specified immediate data are added. The result is stored in the Accumulator.
Operation	ACC ← ACC + x
Affected flag(s)	OV, Z, AC, C, SC
ADDM A,[m]	Add ACC to Data Memory
Description	The contents of the specified Data Memory and the Accumulator are added. The result is stored in the specified Data Memory.
Operation	[m] ← ACC + [m]
Affected flag(s)	OV, Z, AC, C, SC
AND A,[m]	Logical AND Data Memory to ACC
Description	Data in the Accumulator and the specified Data Memory perform a bitwise logical AND operation. The result is stored in the Accumulator.
Operation	ACC ← ACC ″AND″ [m]
Affected flag(s)	Z
AND A,x	Logical AND immediate data to ACC
Description	Data in the Accumulator and the specified immediate data perform a bit wise logical AND operation. The result is stored in the Accumulator.
Operation	ACC ← ACC ″AND″ x
Affected flag(s)	Z
ANDM A,[m]	Logical AND ACC to Data Memory
Description	Data in the specified Data Memory and the Accumulator perform a bitwise logical AND operation. The result is stored in the Data Memory.
Operation	[m] ← ACC ″AND″ [m]
Affected flag(s)	Z

CALL addr	Subroutine call
Description	Unconditionally calls a subroutine at the specified address. The Program Counter then increments by 1 to obtain the address of the next instruction which is then pushed onto the stack. The specified address is then loaded and the program continues execution from this new address. As this instruction requires an additional operation, it is a two cycle instruction.
Operation	Stack ← Program Counter + 1 Program Counter ← addr
Affected flag(s)	None
CLR [m]	Clear Data Memory
Description	Each bit of the specified Data Memory is cleared to 0.
Operation	[m] ← 00H
Affected flag(s)	None
CLR [m].i	Clear bit of Data Memory
Description	Bit i of the specified Data Memory is cleared to 0.
Operation	[m].i ← 0
Affected flag(s)	None
CLR WDT	Clear Watchdog Timer
Description	The TO, PDF flags and the WDT are all cleared.
Operation	WDT cleared TO ← 0 PDF ← 0
Affected flag(s)	TO, PDF
CPL [m]	Complement Data Memory
Description	Each bit of the specified Data Memory is logically complemented (1′s complement). Bits which previously contained a 1 are changed to 0 and vice versa.
Operation	[m] ← $\overline{[m]}$
Affected flag(s)	Z
CPLA [m]	Complement Data Memory with result in ACC
Description	Each bit of the specified Data Memory is logically complemented (1′s complement). Bits which previously contained a 1 are changed to 0 and vice versa. The complemented result is stored in the Accumulator and the contents of the Data Memory remain unchanged.
Operation	ACC ← $\overline{[m]}$
Affected flag(s)	Z
DAA [m]	Decimal-Adjust ACC for addition with result in Data Memory
Description	Convert the contents of the Accumulator value to a BCD (Binary Coded Decimal) value resulting from the previous addition of two BCD variables. If the low nibble is greater than 9 or if AC flag is set, then a value of 6 will be added to the low nibble. Otherwise the low nibble remains unchanged. If the high nibble is greater than 9 or if the C flag is set, then a value of 6 will be added to the high nibble. Essentially, the decimal conversion is performed by adding 00H, 06H, 60H or 66H depending on the Accumulator and flag conditions. Only the C flag may be affected by this instruction which indicates that if the original BCD sum is greater than 100, it allows multiple precision decimal addition.
Operation	[m] ← ACC + 00H or [m] ← ACC + 06H or [m] ← ACC + 60H or [m] ← ACC + 66H
Affected flag(s)	C

DEC [m]	Decrement Data Memory
Description	Data in the specified Data Memory is decremented by 1.
Operation	[m] ← [m] − 1
Affected flag(s)	Z

DECA [m]	Decrement Data Memory with result in ACC
Description	Data in the specified Data Memory is decremented by 1. The result is stored in the Accumulator. The contents of the Data Memory remain unchanged.
Operation	ACC ← [m] − 1
Affected flag(s)	Z

HALT	Enter power down mode
Description	This instruction stops the program execution and turns off the system clock. The contents of the Data Memory and registers are retained. The WDT and prescaler are cleared. The power down flag PDF is set and the WDT time-out flag TO is cleared.
Operation	TO ← 0 PDF ← 1
Affected flag(s)	TO, PDF

INC [m]	Increment Data Memory
Description	Data in the specified Data Memory is incremented by 1.
Operation	[m] ← [m] + 1
Affected flag(s)	Z

INCA [m]	Increment Data Memory with result in ACC
Description	Data in the specified Data Memory is incremented by 1. The result is stored in the Accumulator. The contents of the Data Memory remain unchanged.
Operation	ACC ← [m] + 1
Affected flag(s)	Z

JMP addr	Jump unconditionally
Description	The contents of the Program Counter are replaced with the specified address. Program execution then continues from this new address. As this requires the insertion of a dummy instruction while the new address is loaded, it is a two cycle instruction.
Operation	Program Counter ← addr
Affected flag(s)	None

MOV A,[m]	Move Data Memory to ACC
Description	The contents of the specified Data Memory are copied to the Accumulator.
Operation	ACC ← [m]
Affected flag(s)	None

MOV A,x	Move immediate data to ACC
Description	The immediate data specified is loaded into the Accumulator.
Operation	ACC ← x
Affected flag(s)	None

MOV [m],A	Move ACC to Data Memory
Description	The contents of the Accumulator are copied to the specified Data Memory.
Operation	[m] ← ACC
Affected flag(s)	None

NOP	No operation
Description	No operation is performed. Execution continues with the next instruction.
Operation	No operation
Affected flag(s)	None

OR A,[m]	Logical OR Data Memory to ACC
Description	Data in the Accumulator and the specified Data Memory perform a bitwise logical OR operation. The result is stored in the Accumulator.
Operation	ACC ← ACC ″OR″ [m]
Affected flag(s)	Z

OR A,x	Logical OR immediate data to ACC
Description	Data in the Accumulator and the specified immediate data perform a bitwise logical OR operation. The result is stored in the Accumulator.
Operation	ACC ← ACC ″OR″ x
Affected flag(s)	Z

ORM A,[m]	Logical OR ACC to Data Memory
Description	Data in the specified Data Memory and the Accumulator perform a bitwise logical OR operation. The result is stored in the Data Memory.
Operation	[m] ← ACC ″OR″ [m]
Affected flag(s)	Z

RET	Return from subroutine
Description	The Program Counter is restored from the stack. Program execution continues at the restored address.
Operation	Program Counter ← Stack
Affected flag(s)	None

RET A,x	Return from subroutine and load immediate data to ACC
Description	The Program Counter is restored from the stack and the Accumulator loaded with the specified immediate data. Program execution continues at the restored address.
Operation	Program Counter ← Stack ACC ← x
Affected flag(s)	None

RETI	Return from interrupt
Description	The Program Counter is restored from the stack and the interrupts are re-enabled by setting the EMI bit. EMI is the master interrupt global enable bit. If an interrupt was pending when the RETI instruction is executed, the pending Interrupt routine will be processed before returning to the main program.
Operation	Program Counter ← Stack EMI ← 1
Affected flag(s)	None

RL [m]	Rotate Data Memory left
Description	The contents of the specified Data Memory are rotated left by 1 bit with bit 7 rotated into bit 0.
Operation	[m].(i+1) ← [m].i; (i=0~6) [m].0 ← [m].7
Affected flag(s)	None

RLA [m] Rotate Data Memory left with result in ACC

Description: The contents of the specified Data Memory are rotated left by 1 bit with bit 7 rotated into bit 0. The rotated result is stored in the Accumulator and the contents of the Data Memory remain unchanged.

Operation:
ACC.(i+1) ← [m].i; (i=0~6)
ACC.0 ← [m].7

Affected flag(s): None

RLC [m] Rotate Data Memory left through Carry

Description: The contents of the specified Data Memory and the carry flag are rotated left by 1 bit. Bit 7 replaces the Carry bit and the original carry flag is rotated into bit 0.

Operation:
[m].(i+1) ← [m].i; (i=0~6)
[m].0 ← C
C ← [m].7

Affected flag(s): C

RLCA [m] Rotate Data Memory left through Carry with result in ACC

Description: Data in the specified Data Memory and the carry flag are rotated left by 1 bit. Bit 7 replaces the Carry bit and the original carry flag is rotated into the bit 0. The rotated result is stored in the Accumulator and the contents of the Data Memory remain unchanged.

Operation:
ACC.(i+1) ← [m].i; (i=0~6)
ACC.0 ← C
C ← [m].7

Affected flag(s): C

RR [m] Rotate Data Memory right

Description: The contents of the specified Data Memory are rotated right by 1 bit with bit 0 rotated into bit 7.

Operation:
[m].i ← [m].(i+1); (i=0~6)
[m].7 ← [m].0

Affected flag(s): None

RRA [m] Rotate Data Memory right with result in ACC

Description: Data in the specified Data Memory is rotated right by 1 bit with bit 0 rotated into bit 7. The rotated result is stored in the Accumulator and the contents of the Data Memory remain unchanged.

Operation:
ACC.i ← [m].(i+1); (i=0~6)
ACC.7 ← [m].0

Affected flag(s): None

RRC [m] Rotate Data Memory right through Carry

Description: The contents of the specified Data Memory and the carry flag are rotated right by 1 bit. Bit 0 replaces the Carry bit and the original carry flag is rotated into bit 7.

Operation:
[m].i ← [m].(i+1); (i=0~6)
[m].7 ← C
C ← [m].0

Affected flag(s): C

RRCA [m] Rotate Data Memory right through Carry with result in ACC

Description: Data in the specified Data Memory and the carry flag are rotated right by 1 bit. Bit 0 replaces the Carry bit and the original carry flag is rotated into bit 7. The rotated result is stored in the Accumulator and the contents of the Data Memory remain unchanged.

Operation:
ACC.i ← [m].(i+1); (i=0~6)
ACC.7 ← C
C ← [m].0

Affected flag(s): C

SBC A,[m] Subtract Data Memory from ACC with Carry

Description: The contents of the specified Data Memory and the complement of the carry flag are subtracted from the Accumulator. The result is stored in the Accumulator. Note that if the result of subtraction is negative, the C flag will be cleared to 0, otherwise if the result is positive or zero, the C flag will be set to 1.

Operation: ACC ← ACC − [m] − $\overline{C}$

Affected flag(s): OV, Z, AC, C, SC, CZ

SBC A, x Subtract immediate data from ACC with Carry

Description: The immediate data and the complement of the carry flag are subtracted from the Accumulator. The result is stored in the Accumulator. Note that if the result of subtraction is negative, the C flag will be cleared to 0, otherwise if the result is positive or zero, the C flag will be set to 1.

Operation: ACC ← ACC – [m] – $\overline{C}$

Affected flag(s): OV, Z, AC, C, SC, CZ

SBCM A,[m] Subtract Data Memory from ACC with Carry and result in Data Memory

Description: The contents of the specified Data Memory and the complement of the carry flag are subtracted from the Accumulator. The result is stored in the Data Memory. Note that if the result of subtraction is negative, the C flag will be cleared to 0, otherwise if the result is positive or zero, the C flag will be set to 1.

Operation: [m] ← ACC − [m] − $\overline{C}$

Affected flag(s): OV, Z, AC, C, SC, CZ

SDZ [m] Skip if decrement Data Memory is 0

Description: The contents of the specified Data Memory are first decremented by 1. If the result is 0 the following instruction is skipped. As this requires the insertion of a dummy instruction while the next instruction is fetched, it is a two cycle instruction. If the result is not 0 the program proceeds with the following instruction.

Operation:
[m] ← [m] − 1
Skip if [m]=0

Affected flag(s): None

SDZA [m] Skip if decrement Data Memory is zero with result in ACC

Description: The contents of the specified Data Memory are first decremented by 1. If the result is 0, the following instruction is skipped. The result is stored in the Accumulator but the specified Data Memory contents remain unchanged. As this requires the insertion of a dummy instruction while the next instruction is fetched, it is a two cycle instruction. If the result is not 0, the program proceeds with the following instruction.

Operation:
ACC ← [m] − 1
Skip if ACC=0

Affected flag(s): None

SET [m]	Set Data Memory
Description	Each bit of the specified Data Memory is set to 1.
Operation	[m] ← FFH
Affected flag(s)	None

SET [m].i	Set bit of Data Memory
Description	Bit i of the specified Data Memory is set to 1.
Operation	[m].i ← 1
Affected flag(s)	None

SIZ [m]	Skip if increment Data Memory is 0
Description	The contents of the specified Data Memory are first incremented by 1. If the result is 0, the following instruction is skipped. As this requires the insertion of a dummy instruction while the next instruction is fetched, it is a two cycle instruction. If the result is not 0 the program proceeds with the following instruction.
Operation	[m] ← [m] + 1 Skip if [m]=0
Affected flag(s)	None

SIZA [m]	Skip if increment Data Memory is zero with result in ACC
Description	The contents of the specified Data Memory are first incremented by 1. If the result is 0, the following instruction is skipped. The result is stored in the Accumulator but the specified Data Memory contents remain unchanged. As this requires the insertion of a dummy instruction while the next instruction is fetched, it is a two cycle instruction. If the result is not 0 the program proceeds with the following instruction.
Operation	ACC ← [m] + 1 Skip if ACC=0
Affected flag(s)	None

SNZ [m].i	Skip if bit i of Data Memory is not 0
Description	If bit i of the specified Data Memory is not 0, the following instruction is skipped. As this requires the insertion of a dummy instruction while the next instruction is fetched, it is a two cycle instruction. If the result is 0 the program proceeds with the following instruction.
Operation	Skip if [m].i ≠ 0
Affected flag(s)	None

SNZ [m]	Skip if Data Memory is not 0
Description	The contents of the specified Data Memory are read out and then written back to the specified Data Memory again. If the specified Data Memory is not 0, the following instruction is skipped. As this requires the insertion of a dummy instruction while the next instruction is fetched, it is a two cycle instruction. If the result is 0 the program proceeds with the following instruction.
Operation	Skip if [m]≠ 0
Affected flag(s)	None

SUB A,[m]	Subtract Data Memory from ACC
Description	The specified Data Memory is subtracted from the contents of the Accumulator. The result is stored in the Accumulator. Note that if the result of subtraction is negative, the C flag will be cleared to 0, otherwise if the result is positive or zero, the C flag will be set to 1.
Operation	ACC ← ACC − [m]
Affected flag(s)	OV, Z, AC, C, SC, CZ

SUBM A,[m] Subtract Data Memory from ACC with result in Data Memory

Description: The specified Data Memory is subtracted from the contents of the Accumulator. The result is stored in the Data Memory. Note that if the result of subtraction is negative, the C flag will be cleared to 0, otherwise if the result is positive or zero, the C flag will be set to 1.

Operation: [m] ← ACC − [m]

Affected flag(s): OV, Z, AC, C, SC, CZ

SUB A,x Subtract immediate data from ACC

Description: The immediate data specified by the code is subtracted from the contents of the Accumulator. The result is stored in the Accumulator. Note that if the result of subtraction is negative, the C flag will be cleared to 0, otherwise if the result is positive or zero, the C flag will be set to 1.

Operation: ACC ← ACC − x

Affected flag(s): OV, Z, AC, C, SC, CZ

SWAP [m] Swap nibbles of Data Memory

Description: The low-order and high-order nibbles of the specified Data Memory are interchanged.

Operation: [m].3~[m].0 ↔ [m].7~[m].4

Affected flag(s): None

SWAPA [m] Swap nibbles of Data Memory with result in ACC

Description: The low-order and high-order nibbles of the specified Data Memory are interchanged. The result is stored in the Accumulator. The contents of the Data Memory remain unchanged.

Operation: ACC.3~ACC.0 ← [m].7~[m].4
ACC.7~ACC.4 ← [m].3~[m].0

Affected flag(s): None

SZ [m] Skip if Data Memory is 0

Description: The contents of the specified Data Memory are read out and then written back to the specified Data Memory again. If the contents of the specified Data Memory is 0, the following instruction is skipped. As this requires the insertion of a dummy instruction while the next instruction is fetched, it is a two cycle instruction. If the result is not 0 the program proceeds with the following instruction.

Operation: Skip if [m]=0

Affected flag(s): None

SZA [m] Skip if Data Memory is 0 with data movement to ACC

Description: The contents of the specified Data Memory are copied to the Accumulator. If the value is zero, the following instruction is skipped. As this requires the insertion of a dummy instruction while the next instruction is fetched, it is a two cycle instruction. If the result is not 0 the program proceeds with the following instruction.

Operation: ACC ← [m]
Skip if [m]=0

Affected flag(s): None

SZ [m].i Skip if bit i of Data Memory is 0

Description: If bit i of the specified Data Memory is 0, the following instruction is skipped. As this requires the insertion of a dummy instruction while the next instruction is fetched, it is a two cycle instruction. If the result is not 0, the program proceeds with the following instruction.

Operation: Skip if [m].i=0

Affected flag(s): None

TABRD [m]	Read table (specific page) to TBLH and Data Memory
Description	The low byte of the program code (specific page) addressed by the table pointer (TBLP and TBHP) is moved to the specified Data Memory and the high byte moved to TBLH.
Operation	[m] ← program code (low byte) TBLH ← program code (high byte)
Affected flag(s)	None

TABRDL [m]	Read table (last page) to TBLH and Data Memory
Description	The low byte of the program code (last page) addressed by the table pointer (TBLP) is moved to the specified Data Memory and the high byte moved to TBLH.
Operation	[m] ← program code (low byte) TBLH ← program code (high byte)
Affected flag(s)	None

ITABRD [m]	Increment table pointer low byte first and read table (specific page) to TBLH and Data Memory
Description	Increment table pointer low byte, TBLP, first and then the program code (specific page) addressed by the table pointer (TBHP and TBLP) is moved to the specified Data Memory and the high byte moved to TBLH.
Operation	[m] ← program code (low byte) TBLH ← program code (high byte)
Affected flag(s)	None

ITABRDL [m]	Increment table pointer low byte first and read table (last page) to TBLH and Data Memory
Description	Increment table pointer low byte, TBLP, first and then the low byte of the program code (last page) addressed by the table pointer (TBLP) is moved to the specified Data Memory and the high byte moved to TBLH.
Operation	[m] ← program code (low byte) TBLH ← program code (high byte)
Affected flag(s)	None

XOR A,[m]	Logical XOR Data Memory to ACC
Description	Data in the Accumulator and the specified Data Memory perform a bitwise logical XOR operation. The result is stored in the Accumulator.
Operation	ACC ← ACC ″XOR″ [m]
Affected flag(s)	Z

XORM A,[m]	Logical XOR ACC to Data Memory
Description	Data in the specified Data Memory and the Accumulator perform a bitwise logical XOR operation. The result is stored in the Data Memory.
Operation	[m] ← ACC ″XOR″ [m]
Affected flag(s)	Z

XOR A,x	Logical XOR immediate data to ACC
Description	Data in the Accumulator and the specified immediate data perform a bitwise logical XOR operation. The result is stored in the Accumulator.
Operation	ACC ← ACC ″XOR″ x
Affected flag(s)	Z

Extended Instruction Definition

The extended instructions are used to directly access the data stored in any data memory sections.

LADC A,[m] Add Data Memory to ACC with Carry

Description: The contents of the specified Data Memory, Accumulator and the carry flag are added. The result is stored in the Accumulator.

Operation: ACC ← ACC + [m] + C

Affected flag(s): OV, Z, AC, C, SC

LADCM A,[m] Add ACC to Data Memory with Carry

Description: The contents of the specified Data Memory, Accumulator and the carry flag are added. The result is stored in the specified Data Memory.

Operation: [m] ← ACC + [m] + C

Affected flag(s): OV, Z, AC, C, SC

LADD A,[m] Add Data Memory to ACC

Description: The contents of the specified Data Memory and the Accumulator are added. The result is stored in the Accumulator.

Operation: ACC ← ACC + [m]

Affected flag(s): OV, Z, AC, C, SC

LADDM A,[m] Add ACC to Data Memory

Description: The contents of the specified Data Memory and the Accumulator are added. The result is stored in the specified Data Memory.

Operation: [m] ← ACC + [m]

Affected flag(s): OV, Z, AC, C, SC

LAND A,[m] Logical AND Data Memory to ACC

Description: Data in the Accumulator and the specified Data Memory perform a bitwise logical AND operation. The result is stored in the Accumulator.

Operation: ACC ← ACC ″AND″ [m]

Affected flag(s): Z

LANDM A,[m] Logical AND ACC to Data Memory

Description: Data in the specified Data Memory and the Accumulator perform a bitwise logical AND operation. The result is stored in the Data Memory.

Operation: [m] ← ACC ″AND″ [m]

Affected flag(s): Z

LCLR [m] Clear Data Memory

Description: Each bit of the specified Data Memory is cleared to 0.

Operation: [m] ← 00H

Affected flag(s): None

LCLR [m].i Clear bit of Data Memory

Description: Bit i of the specified Data Memory is cleared to 0.

Operation: [m].i ← 0

Affected flag(s): None

LCPL [m] Complement Data Memory

Description: Each bit of the specified Data Memory is logically complemented (1′s complement). Bits which previously contained a 1 are changed to 0 and vice versa.

Operation: $[m] \leftarrow \overline{[m]}$

Affected flag(s): Z

LCPLA [m] Complement Data Memory with result in ACC

Description: Each bit of the specified Data Memory is logically complemented (1′s complement). Bits which previously contained a 1 are changed to 0 and vice versa. The complemented result is stored in the Accumulator and the contents of the Data Memory remain unchanged.

Operation: $ACC \leftarrow \overline{[m]}$

Affected flag(s): Z

LDAA [m] Decimal-Adjust ACC for addition with result in Data Memory

Description: Convert the contents of the Accumulator value to a BCD (Binary Coded Decimal) value resulting from the previous addition of two BCD variables. If the low nibble is greater than 9 or if AC flag is set, then a value of 6 will be added to the low nibble. Otherwise the low nibble remains unchanged. If the high nibble is greater than 9 or if the C flag is set, then a value of 6 will be added to the high nibble. Essentially, the decimal conversion is performed by adding 00H, 06H, 60H or 66H depending on the Accumulator and flag conditions. Only the C flag may be affected by this instruction which indicates that if the original BCD sum is greater than 100, it allows multiple precision decimal addition.

Operation:
$[m] \leftarrow ACC + 00H$ or
$[m] \leftarrow ACC + 06H$ or
$[m] \leftarrow ACC + 60H$ or
$[m] \leftarrow ACC + 66H$

Affected flag(s): C

LDEC [m] Decrement Data Memory

Description: Data in the specified Data Memory is decremented by 1.

Operation: $[m] \leftarrow [m] - 1$

Affected flag(s): Z

LDECA [m] Decrement Data Memory with result in ACC

Description: Data in the specified Data Memory is decremented by 1. The result is stored in the Accumulator. The contents of the Data Memory remain unchanged.

Operation: $ACC \leftarrow [m] - 1$

Affected flag(s): Z

LINC [m] Increment Data Memory

Description: Data in the specified Data Memory is incremented by 1.

Operation: $[m] \leftarrow [m] + 1$

Affected flag(s): Z

LINCA [m] Increment Data Memory with result in ACC

Description: Data in the specified Data Memory is incremented by 1. The result is stored in the Accumulator. The contents of the Data Memory remain unchanged.

Operation: $ACC \leftarrow [m] + 1$

Affected flag(s): Z

LMOV A,[m] Move Data Memory to ACC

Description: The contents of the specified Data Memory are copied to the Accumulator.

Operation: ACC ← [m]

Affected flag(s): None

LMOV [m],A Move ACC to Data Memory

Description: The contents of the Accumulator are copied to the specified Data Memory.

Operation: [m] ← ACC

Affected flag(s): None

LOR A,[m] Logical OR Data Memory to ACC

Description: Data in the Accumulator and the specified Data Memory perform a bitwise logical OR operation. The result is stored in the Accumulator.

Operation: ACC ← ACC ″OR″ [m]

Affected flag(s): Z

LORM A,[m] Logical OR ACC to Data Memory

Description: Data in the specified Data Memory and the Accumulator perform a bitwise logical OR operation. The result is stored in the Data Memory.

Operation: [m] ← ACC ″OR″ [m]

Affected flag(s): Z

LRL [m] Rotate Data Memory left

Description: The contents of the specified Data Memory are rotated left by 1 bit with bit 7 rotated into bit 0.

Operation: [m].(i+1) ← [m].i; (i=0~6)
[m].0 ← [m].7

Affected flag(s): None

LRLA [m] Rotate Data Memory left with result in ACC

Description: The contents of the specified Data Memory are rotated left by 1 bit with bit 7 rotated into bit 0. The rotated result is stored in the Accumulator and the contents of the Data Memory remain unchanged.

Operation: ACC.(i+1) ← [m].i; (i=0~6)
ACC.0 ← [m].7

Affected flag(s): None

LRLC [m] Rotate Data Memory left through Carry

Description: The contents of the specified Data Memory and the carry flag are rotated left by 1 bit. Bit 7 replaces the Carry bit and the original carry flag is rotated into bit 0.

Operation: [m].(i+1) ← [m].i; (i=0~6)
[m].0 ← C
C ← [m].7

Affected flag(s): C

LRLCA [m] Rotate Data Memory left through Carry with result in ACC

Description: Data in the specified Data Memory and the carry flag are rotated left by 1 bit. Bit 7 replaces the Carry bit and the original carry flag is rotated into the bit 0. The rotated result is stored in the Accumulator and the contents of the Data Memory remain unchanged.

Operation: ACC.(i+1) ← [m].i; (i=0~6)
ACC.0 ← C
C ← [m].7

Affected flag(s): C

LRR [m] Rotate Data Memory right

Description: The contents of the specified Data Memory are rotated right by 1 bit with bit 0 rotated into bit 7.

Operation:
[m].i ← [m].(i+1); (i=0~6)
[m].7 ← [m].0

Affected flag(s): None

LRRA [m] Rotate Data Memory right with result in ACC

Description: Data in the specified Data Memory is rotated right by 1 bit with bit 0 rotated into bit 7. The rotated result is stored in the Accumulator and the contents of the Data Memory remain unchanged.

Operation:
ACC.i ← [m].(i+1); (i=0~6)
ACC.7 ← [m].0

Affected flag(s): None

LRRC [m] Rotate Data Memory right through Carry

Description: The contents of the specified Data Memory and the carry flag are rotated right by 1 bit. Bit 0 replaces the Carry bit and the original carry flag is rotated into bit 7.

Operation:
[m].i ← [m].(i+1); (i=0~6)
[m].7 ← C
C ← [m].0

Affected flag(s): C

LRRCA [m] Rotate Data Memory right through Carry with result in ACC

Description: Data in the specified Data Memory and the carry flag are rotated right by 1 bit. Bit 0 replaces the Carry bit and the original carry flag is rotated into bit 7. The rotated result is stored in the Accumulator and the contents of the Data Memory remain unchanged.

Operation:
ACC.i ← [m].(i+1); (i=0~6)
ACC.7 ← C
C ← [m].0

Affected flag(s): C

LSBC A,[m] Subtract Data Memory from ACC with Carry

Description: The contents of the specified Data Memory and the complement of the carry flag are subtracted from the Accumulator. The result is stored in the Accumulator. Note that if the result of subtraction is negative, the C flag will be cleared to 0, otherwise if the result is positive or zero, the C flag will be set to 1.

Operation: $ACC \leftarrow ACC - [m] - \overline{C}$

Affected flag(s): OV, Z, AC, C, SC, CZ

LSBCM A,[m] Subtract Data Memory from ACC with Carry and result in Data Memory

Description: The contents of the specified Data Memory and the complement of the carry flag are subtracted from the Accumulator. The result is stored in the Data Memory. Note that if the result of subtraction is negative, the C flag will be cleared to 0, otherwise if the result is positive or zero, the C flag will be set to 1.

Operation: $[m] \leftarrow ACC - [m] - \overline{C}$

Affected flag(s): OV, Z, AC, C, SC, CZ

LSDZ [m] Skip if decrement Data Memory is 0

Description: The contents of the specified Data Memory are first decremented by 1. If the result is 0 the following instruction is skipped. As this requires the insertion of a dummy instruction while the next instruction is fetched, it is a three cycle instruction. If the result is not 0 the program proceeds with the following instruction.

Operation: [m] ← [m] − 1
Skip if [m]=0

Affected flag(s): None

LSDZA [m] Skip if decrement Data Memory is zero with result in ACC

Description: The contents of the specified Data Memory are first decremented by 1. If the result is 0, the following instruction is skipped. The result is stored in the Accumulator but the specified Data Memory contents remain unchanged. As this requires the insertion of a dummy instruction while the next instruction is fetched, it is a three cycle instruction. If the result is not 0, the program proceeds with the following instruction.

Operation: ACC ← [m] − 1
Skip if ACC=0

Affected flag(s): None

LSET [m] Set Data Memory

Description: Each bit of the specified Data Memory is set to 1.

Operation: [m] ← FFH

Affected flag(s): None

LSET [m].i Set bit of Data Memory

Description: Bit i of the specified Data Memory is set to 1.

Operation: [m].i ← 1

Affected flag(s): None

LSIZ [m] Skip if increment Data Memory is 0

Description: The contents of the specified Data Memory are first incremented by 1. If the result is 0, the following instruction is skipped. As this requires the insertion of a dummy instruction while the next instruction is fetched, it is a three cycle instruction. If the result is not 0 the program proceeds with the following instruction.

Operation: [m] ← [m] + 1
Skip if [m]=0

Affected flag(s): None

LSIZA [m] Skip if increment Data Memory is zero with result in ACC

Description: The contents of the specified Data Memory are first incremented by 1. If the result is 0, the following instruction is skipped. The result is stored in the Accumulator but the specified Data Memory contents remain unchanged. As this requires the insertion of a dummy instruction while the next instruction is fetched, it is a three cycle instruction. If the result is not 0 the program proceeds with the following instruction.

Operation: ACC ← [m] + 1
Skip if ACC=0

Affected flag(s): None

LSNZ [m].i Skip if bit i of Data Memory is not 0

Description: If bit i of the specified Data Memory is not 0, the following instruction is skipped. As this requires the insertion of a dummy instruction while the next instruction is fetched, it is a three cycle instruction. If the result is 0 the program proceeds with the following instruction.

Operation: Skip if [m].i ≠ 0

Affected flag(s): None

LSNZ [m] Skip if Data Memory is not 0

Description: The contents of the specified Data Memory are read out and then written to the specified Data Memory again. If the content of the specified Data Memory is not 0, the following instruction is skipped. As this requires the insertion of a dummy instruction while the next instruction is fetched, it is a three cycle instruction. If the result is 0 the program proceeds with the following instruction.

Operation: Skip if [m] ≠ 0

Affected flag(s): None

LSUB A,[m] Subtract Data Memory from ACC

Description: The specified Data Memory is subtracted from the contents of the Accumulator. The result is stored in the Accumulator. Note that if the result of subtraction is negative, the C flag will be cleared to 0, otherwise if the result is positive or zero, the C flag will be set to 1.

Operation: ACC ← ACC − [m]

Affected flag(s): OV, Z, AC, C, SC, CZ

LSUBM A,[m] Subtract Data Memory from ACC with result in Data Memory

Description: The specified Data Memory is subtracted from the contents of the Accumulator. The result is stored in the Data Memory. Note that if the result of subtraction is negative, the C flag will be cleared to 0, otherwise if the result is positive or zero, the C flag will be set to 1.

Operation: [m] ← ACC − [m]

Affected flag(s): OV, Z, AC, C, SC, CZ

LSWAP [m] Swap nibbles of Data Memory

Description: The low-order and high-order nibbles of the specified Data Memory are interchanged.

Operation: [m].3~[m].0 ↔ [m].7~[m].4

Affected flag(s): None

LSWAPA [m] Swap nibbles of Data Memory with result in ACC

Description: The low-order and high-order nibbles of the specified Data Memory are interchanged. The result is stored in the Accumulator. The contents of the Data Memory remain unchanged.

Operation: ACC.3~ACC.0 ← [m].7~[m].4
ACC.7~ACC.4 ← [m].3~[m].0

Affected flag(s): None

LSZ [m] Skip if Data Memory is 0

Description: The contents of the specified Data Memory are read out and then written to the specified Data Memory again. If the contents of the specified Data Memory is 0, the following instruction is skipped. As this requires the insertion of a dummy instruction while the next instruction is fetched, it is a three cycle instruction. If the result is not 0 the program proceeds with the following instruction.

Operation: Skip if [m]=0

Affected flag(s): None

LSZA [m] Skip if Data Memory is 0 with data movement to ACC

Description: The contents of the specified Data Memory are copied to the Accumulator. If the value is zero, the following instruction is skipped. As this requires the insertion of a dummy instruction while the next instruction is fetched, it is a three cycle instruction. If the result is not 0 the program proceeds with the following instruction.

Operation: ACC ← [m]
Skip if [m]=0

Affected flag(s): None

LSZ [m].i	Skip if bit i of Data Memory is 0
Description	If bit i of the specified Data Memory is 0, the following instruction is skipped. As this requires the insertion of a dummy instruction while the next instruction is fetched, it is a three cycle instruction. If the result is not 0, the program proceeds with the following instruction.
Operation	Skip if [m].i=0
Affected flag(s)	None
LTABRD [m]	Read table (specific page) to TBLH and Data Memory
Description	The low byte of the program code (specific page) addressed by the table pointer (TBHP and TBLP) is moved to the specified Data Memory and the high byte moved to TBLH.
Operation	[m] ← program code (low byte) TBLH ← program code (high byte)
Affected flag(s)	None
LTABRDL [m]	Read table (last page) to TBLH and Data Memory
Description	The low byte of the program code (last page) addressed by the table pointer (TBLP) is moved to the specified Data Memory and the high byte moved to TBLH.
Operation	[m] ← program code (low byte) TBLH ← program code (high byte)
Affected flag(s)	None
LITABRD [m]	Increment table pointer low byte first and read table (specific page) to TBLH and Data Memory
Description	Increment table pointer low byte, TBLP, first and then the program code (specific page) addressed by the table pointer (TBHP and TBLP) is moved to the specified Data Memory and the high byte moved to TBLH.
Operation	[m] ← program code (low byte) TBLH ← program code (high byte)
Affected flag(s)	None
LITABRDL [m]	Increment table pointer low byte first and read table (last page) to TBLH and Data Memory
Description	Increment table pointer low byte, TBLP, first and then the low byte of the program code (last page) addressed by the table pointer (TBLP) is moved to the specified Data Memory and the high byte moved to TBLH.
Operation	[m] ← program code (low byte) TBLH ← program code (high byte)
Affected flag(s)	None
LXOR A,[m]	Logical XOR Data Memory to ACC
Description	Data in the Accumulator and the specified Data Memory perform a bitwise logical XOR operation. The result is stored in the Accumulator.
Operation	ACC ← ACC ″XOR″ [m]
Affected flag(s)	Z
LXORM A,[m]	Logical XOR ACC to Data Memory
Description	Data in the specified Data Memory and the Accumulator perform a bitwise logical XOR operation. The result is stored in the Data Memory.
Operation	[m] ← ACC ″XOR″ [m]
Affected flag(s)	Z

Package Information

Note that the package information provided here is for consultation purposes only. As this information may be updated at regular intervals users are reminded to consult the Holtek website for the latest version of the Package/Carton Information.

Additional supplementary information with regard to packaging is listed below. Click on the relevant section to be transferred to the relevant website page.

- Package Information (include Outline Dimensions, Product Tape and Reel Specifications)
- The Operation Instruction of Packing Materials
- Carton information

28-pin SSOP (150mil) Outline Dimensions

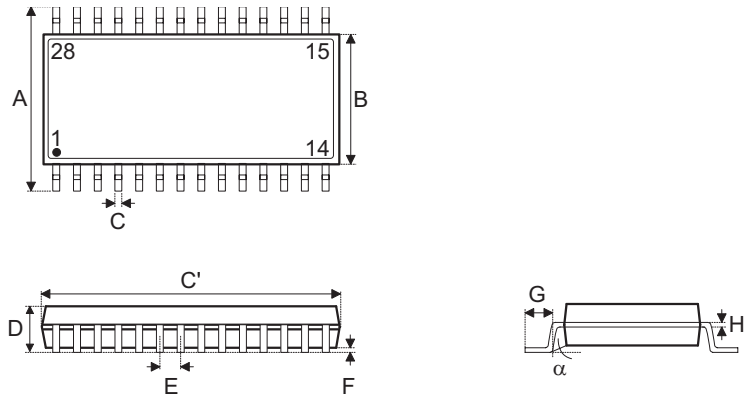

Symbol	Dimensions in inch		
	Min.	Nom.	Max.
A		0.236 BSC	
B		0.154 BSC	
C	0.008	—	0.012
C’		0.390 BSC	
D	—	—	0.069
E		0.025 BSC	
F	0.004	—	0.010
G	0.016	—	0.050
H	0.004	—	0.010
α	0°	—	8°

Symbol	Dimensions in mm		
	Min.	Nom.	Max.
A		6.00 BSC	
B		3.90 BSC	
C	0.20	—	0.30
C’		9.90 BSC	
D	—	—	1.75
E		0.635 BSC	
F	0.10	—	0.25
G	0.41	—	1.27
H	0.10	—	0.25
α	0°	—	8°

Copyright© 2025 by HOLTEK SEMICONDUCTOR INC. All Rights Reserved.

The information provided in this document has been produced with reasonable care and attention before publication, however, HOLTEK does not guarantee that the information is completely accurate. The information contained in this publication is provided for reference only and may be superseded by updates. HOLTEK disclaims any expressed, implied or statutory warranties, including but not limited to suitability for commercialization, satisfactory quality, specifications, characteristics, functions, fitness for a particular purpose, and non-infringement of any third-party's rights. HOLTEK disclaims all liability arising from the information and its application. In addition, HOLTEK does not recommend the use of HOLTEK's products where there is a risk of personal hazard due to malfunction or other reasons. HOLTEK hereby declares that it does not authorise the use of these products in life-saving, life-sustaining or safety critical components. Any use of HOLTEK's products in life-saving/sustaining or safety applications is entirely at the buyer's risk, and the buyer agrees to defend, indemnify and hold HOLTEK harmless from any damages, claims, suits, or expenses resulting from such use. The information provided in this document, including but not limited to the content, data, examples, materials, graphs, and trademarks, is the intellectual property of HOLTEK (and its licensors, where applicable) and is protected by copyright law and other intellectual property laws. No license, express or implied, to any intellectual property right, is granted by HOLTEK herein. HOLTEK reserves the right to revise the information described in the document at any time without prior notice. For the latest information, please contact us.